SYM	CHANGES	DATE	BY

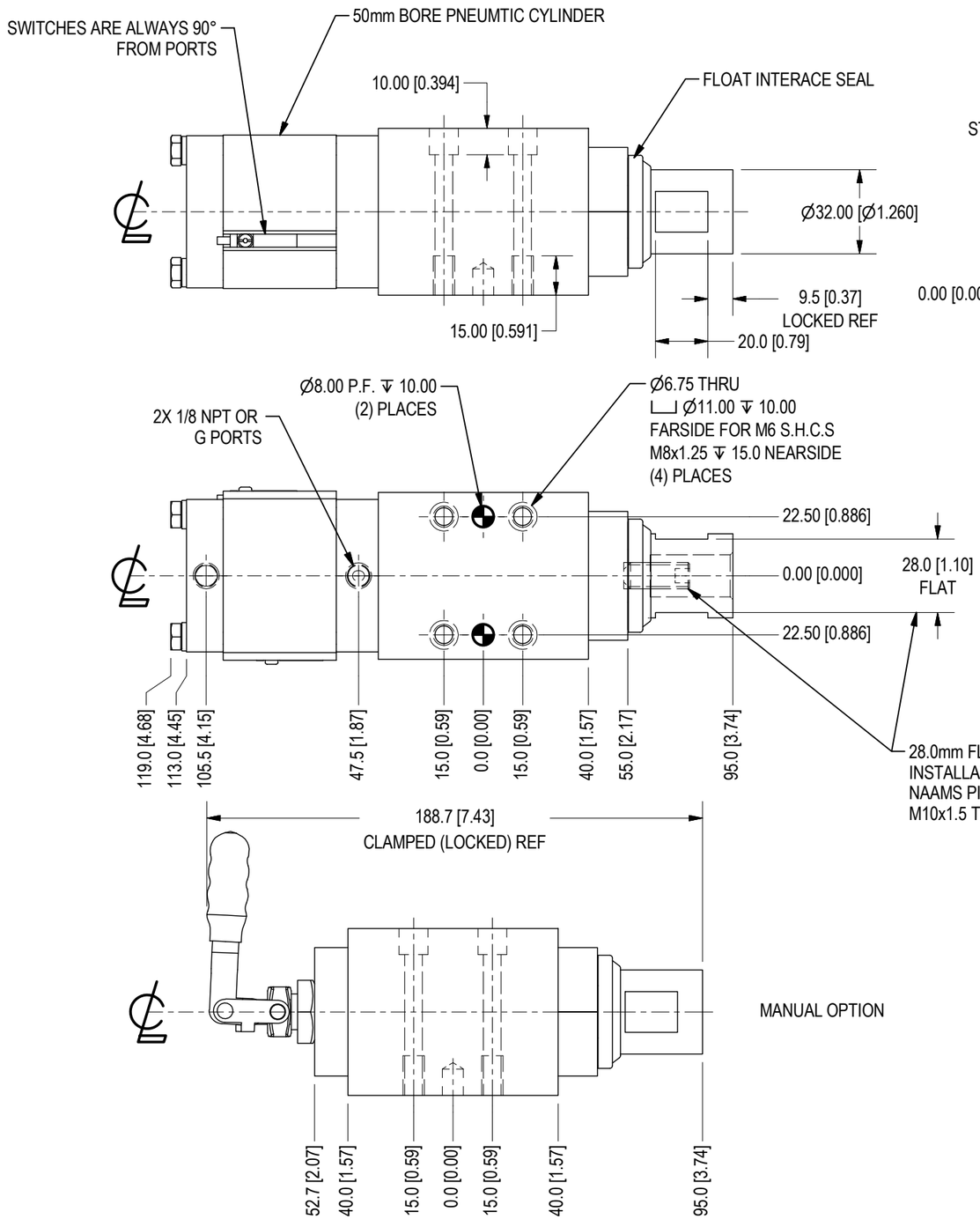

MANUAL OPTION

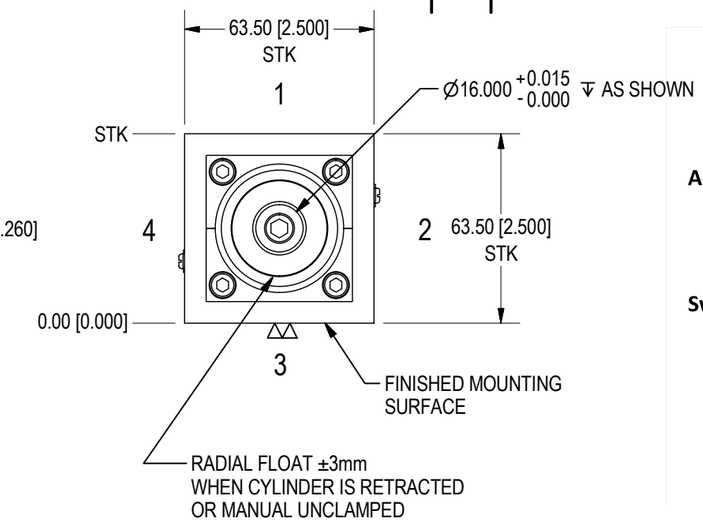

ORDERING INFORMATION

AFP - [ ] E [ ] 0 0

Actuator
- N NPT Ports
- M Manual

Switch
- E Efector (Weld Immune)

Port or Handle Position
- 1 Position (Shown)
- 2 Position
- 3 Position
- 4 Position

NOTE: Switch is 90 degrees from port position, either side

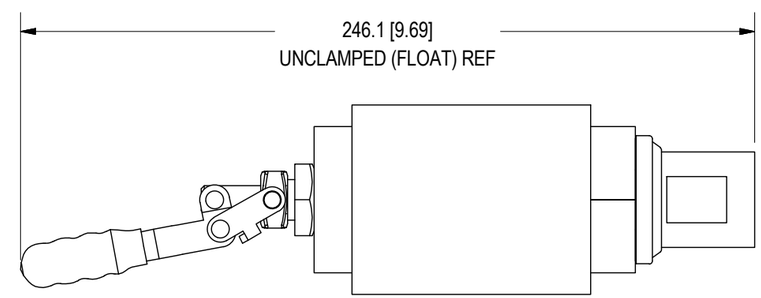

MANUAL OPTION

NOTE: LOAD PART RIGID (CYLINDER EXTENDED OR MANUALY CLAMPED) UNLOAD PART FLOATING (CYLINDER RETRACTED OR MANULY UNCLAMPED)
OPERATING PRESSURE = 60 psi MIN - 120psi MAX WEIGHT = 4.5lbs [2.04kg]

E & E CUSTOM PRODUCTS

7200 MILLER DR.
WARREN, MI 48092
EE-CP.COM

NOTICE: THIS DRAWING IS PROPERTY OF E&E CUSTOM PRODUCTS INCLUDING THE PRINCIPLES OF THE DESIGN INVOLVED, AND IS SUBMITTED WITH AGREEMENT THAT IT IS NOT TO BE REPRODUCED, COPIED, OR LOANED, IN PART OR WHOLE, ACCEPTANCE OF THIS DRAWING WILL BE CONSTRUED AS AN AGREEMENT TO THE ABOVE

TITLE: 50mm BORE PNEUMATIC OR MANUAL FLOAT PIN

PART NO.

DRAWN BY: EE	CHK'D BY: EC	APPR'D BY: MH
DATE: 9/14/2022	DATE: 9/14/2022	DATE: 9/14/2022
SCALE: 1 / 2	DWG. NO. AFP_Template QMC	
SHT 1 OF 1		