ORDERING INFORMATION

CSP24-[ ][ ][ ] N D06 M06 E S [ ] 0 0 E 0

Stroke
- 025 — 025, 050

Actuator
- N — Pneumatic - NPT Ports

Switch
- E — Efector Weld Immune

Shield
- 0 — None
- S — Shield (Shown - Std)

Port Position
- 1 Port Position (Shown)
- 2 Port Position
- 3 Po Port Position
- 4 Port Position

Detent (See Note)
- 0 None

Switch Position
- E S01 Ext Pos

NOTE: Detent option is intended to hold ram in extended position due to loss of air pressure. Detent is not designed to hold GEO location. Tooling weight is not to exceed 12lbs [5kg] vertical. Available for 25-50mm strokes. Body length and cylinder length will increase for 75mm Detent option. Please refer to sheet #2 for 75mm stroke detent dimension.

SYM	CHANGES	DATE	BY

SEE SHEETS 2 & 3 FOR ADDITIONAL MOUTING COMPONENTS

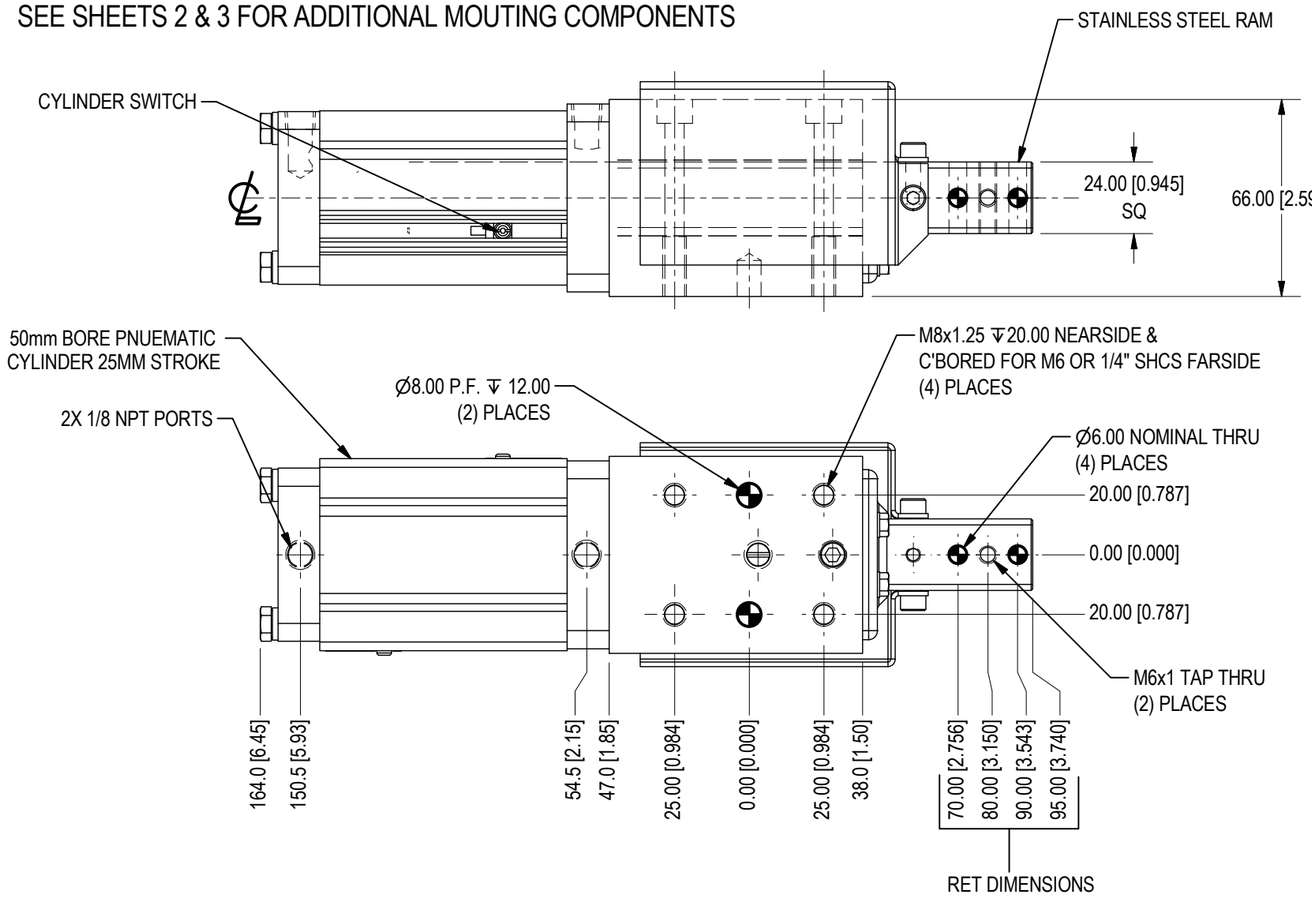

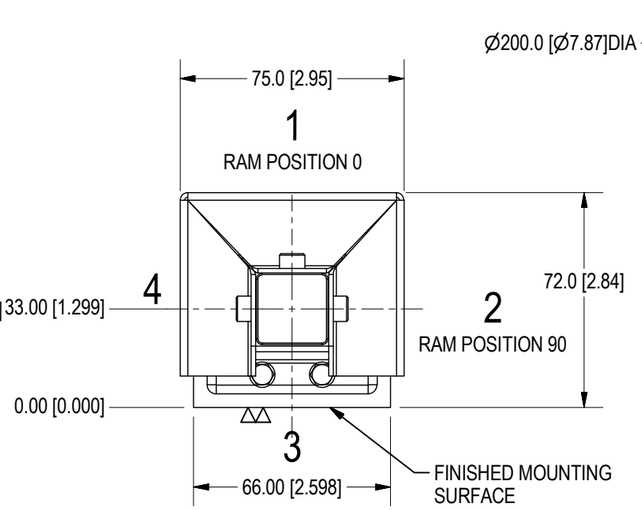

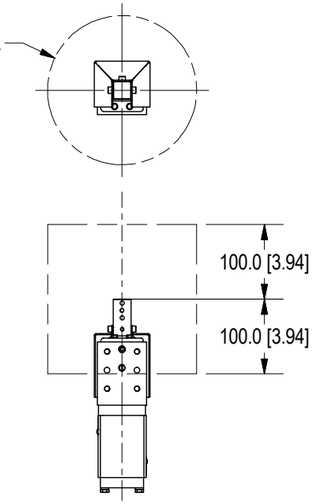

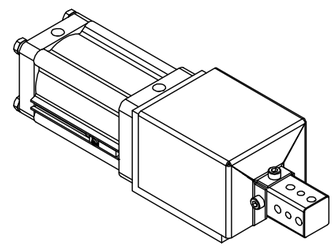

APPLICATION WINDOW
TOOLING MUST BE WITHIN THE APPROVED APPLICATION WINDOW FROM END OF RAM

OPERATING PRESSURE - MIN 60psi = 182lbf [82.5kgf] EXT FORCE - 169lbf [76.6kgf] RETRACT FORCE
MAX 120psi = 362lbf [164.2kgf] EXT FORCE - 338.5lbf [153.5kgf] RETRACT FORCE
LOAD RATING - MAX TOOLING WT=22.5lbs [10kg], MAX GEO CONTACT OFFSET IS 100mm. MAX SIDE LOAD IS 55lbs [25kg]

UNIT WEIGHT = 5.6 lbs

E & E CUSTOM PRODUCTS

7200 MILLER DR.
WARREN, MI 48092
EE-CP.COM

NOTICE: THIS DRAWING IS PROPERTY OF E&E CUSTOM PRODUCTS INCLUDING THE PRINCIPLES OF THE DESIGN INVOLVED, AND IS SUBMITTED WITH AGREEMENT THAT IT IS NOT TO BE REPRODUCED, COPIED, OR LOANED, IN PART OR WHOLE, ACCEPTANCE OF THIS DRAWING WILL BE CONSTRUED AS AN AGREEMENT TO THE ABOVE

TITLE: 24 SERIES COMPACT SHOT PIN

PART NO.

DRAWN BY:	CHK'D BY: EC	APPR'D BY: MH
DATE: 9/14/2022	DATE: 9/14/2022	DATE: 9/14/2022
SCALE: 1/2	DWG. NO. CSP24-Template - QMC	
SHT 1 OF 2		

SYM	CHANGES	DATE	BY

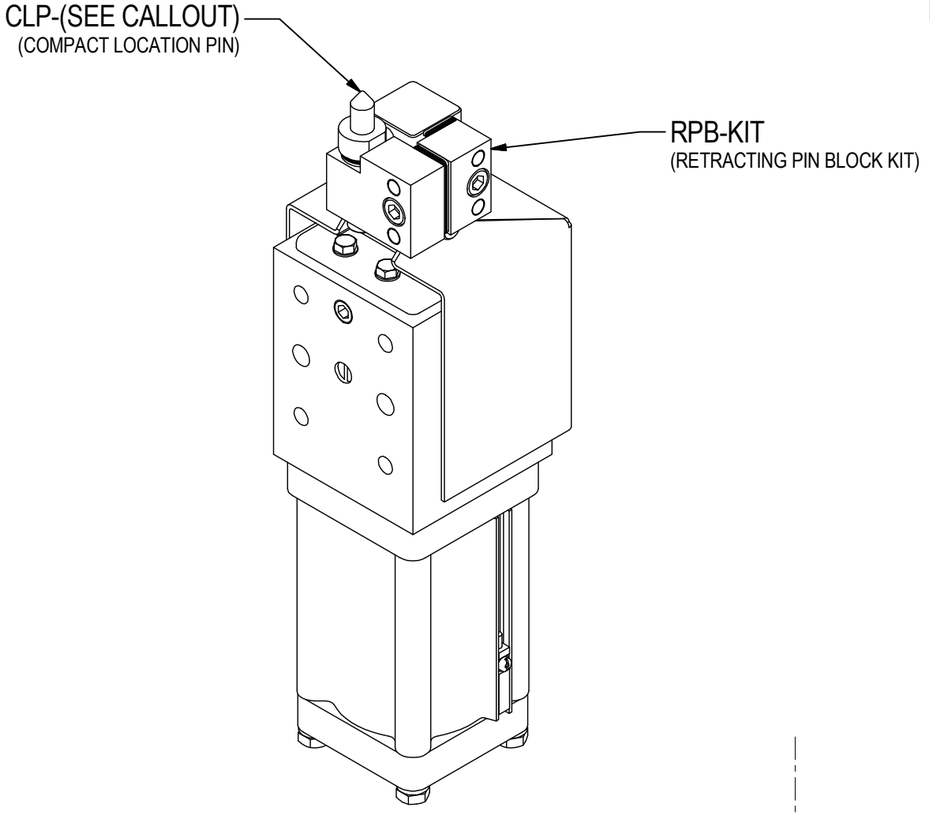

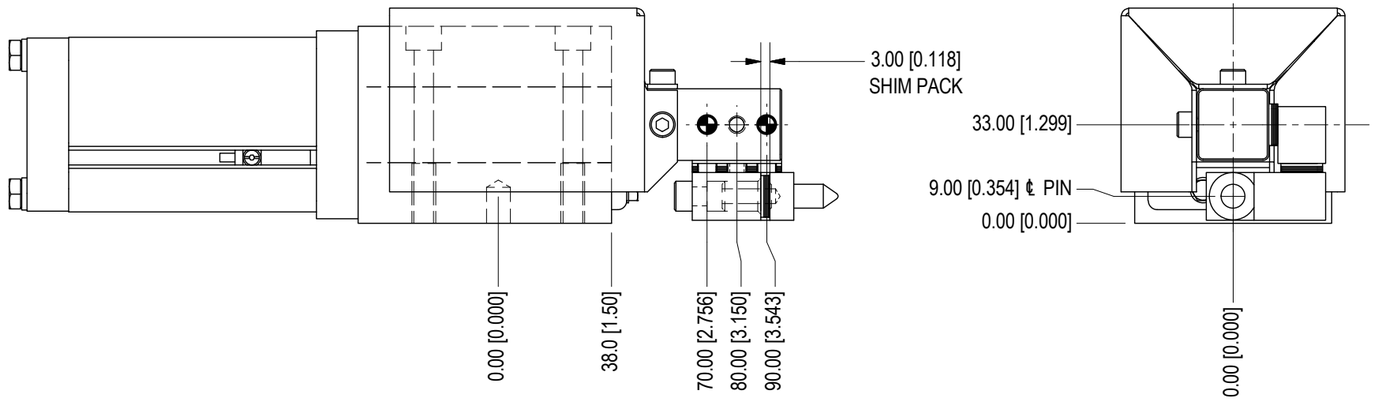

OPTIONS CAN BE MOUNTED TO
ANY SIDE OF RAM

MOUNTING CONFIGURATION SHOWN FOR REF ONLY
PLEASE SEE THE COMPACT COMPONENTS TEMPLATE FOR ORDRING INFORMATION

E & E CUSTOM PRODUCTS

7200 MILLER DR.
WARREN, MI 48092
EE-CP.COM

NOTICE: THIS DRAWING IS PROPERTY OF E&E CUSTOM PRODUCTS INCLUDING THE PRINCIPLES OF THE DESIGN INVOLVED, AND IS SUBMITTED WITH AGREEMENT THAT IT IS NOT TO BE REPRODUCED, COPIED, OR LOANED, IN PART OR WHOLE, ACCEPTANCE OF THIS DRAWING WILL BE CONSTRUED AS AN AGREEMENT TO THE ABOVE

TITLE: 24 SERIES COMPACT SHOT PIN

PART NO.

DRAWN BY:	CHK'D BY: EC	APPR'D BY: MH
DATE: 9/14/2022	DATE: 9/14/2022	DATE: 9/14/2022
SCALE: 1/2	DWG. NO. CSP24-Template - QMC	
SHT 2 OF 2		