SYM	CHANGES	DATE	BY

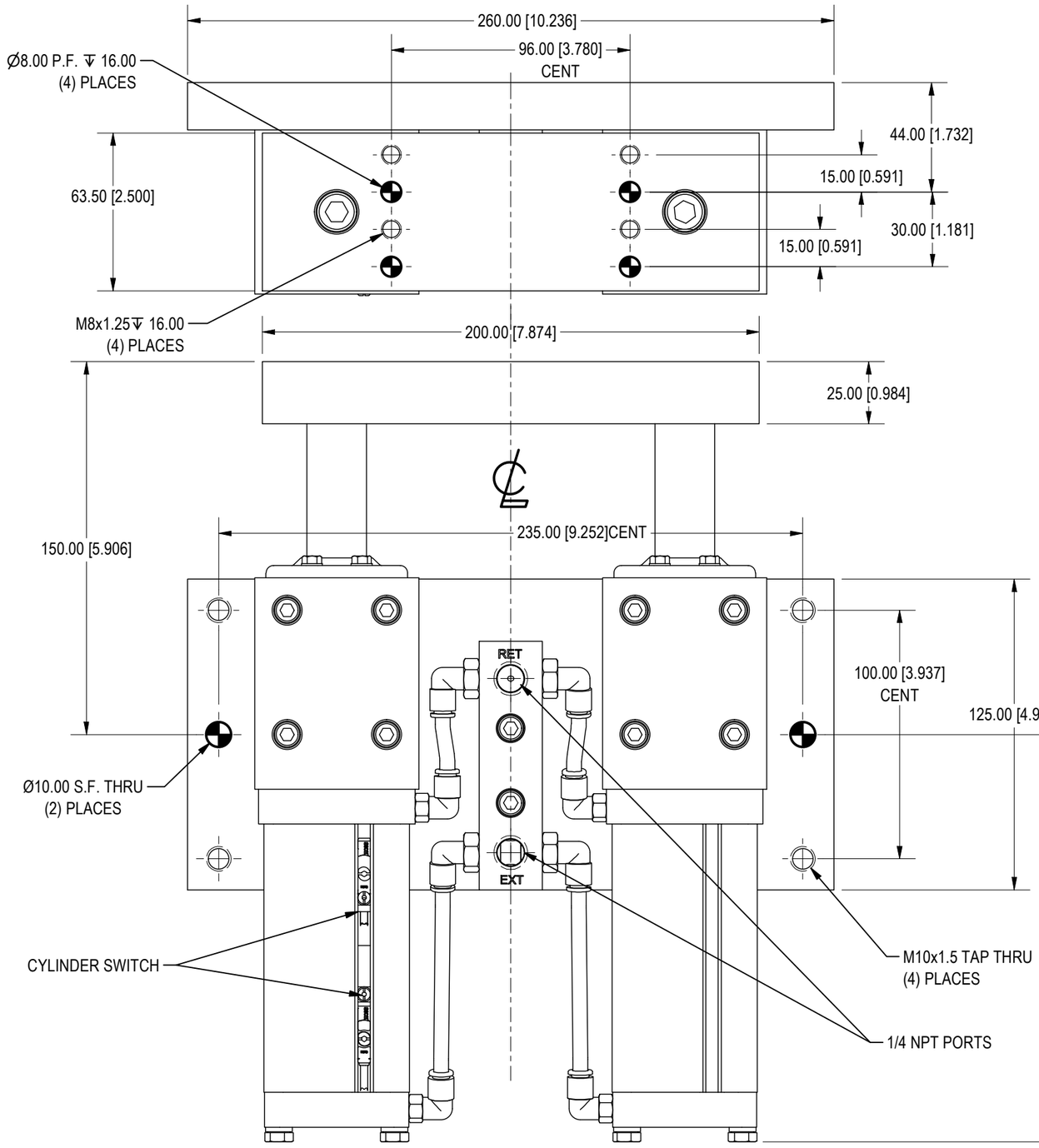

ORDERING INFORMATION

DF24-[ ][ ][ ] N E 0 C E 0

Stroke
025, 050, 075, 100, 125 & 150mm

Actuator
N Pneumatic - NPT Ports

Switch
E Efector Weld Immune

Switch Type
C Cylinder Switch

Switch Position
E S01 Ext Pos

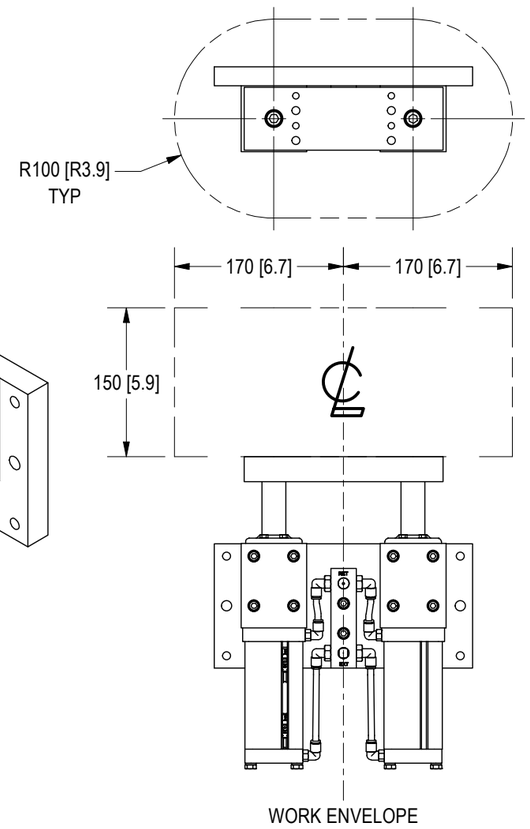

WORK ENVELOPE

OPERATING PRESSURE - MIN 60psi = 364lbf [165.1kgf] EXT FORCE - 338lbf [153.3kgf] RETRACT FORCE
MAX 120psi = 724lbf [328.3kgf] EXT FORCE - 677.0lbf [307.0kgf] RETRACT FORCE

WEIGHTS =
30.0lbs for 25mm, 50mm & 75mm Strokes
34.0lbs for 100mm, 125mm & 150mm StrokeS

E&E CUSTOM PRODUCTS

7200 MILLER DR.
WARREN, MI 48092
EE-CP.COM

NOTICE: THIS DRAWING IS PROPERTY OF E&E CUSTOM PRODUCTS INCLUDING THE PRINCIPLES OF THE DESIGN INVOLVED, AND IS SUBMITTED WITH AGREEMENT THAT IT IS NOT TO BE REPRODUCED, COPIED, OR LOANED, IN PART OR WHOLE, ACCEPTANCE OF THIS DRAWING WILL BE CONSTRUED AS AN AGREEMENT TO THE ABOVE

TITLE: DUAL ASP24 SERIES SHOT PIN

PART NO.

DRAWN BY: EE	CHK'D BY: EC	APPR'D BY: MH
DATE: 6/4/2022	DATE: 11/20/2022	DATE: 11/20/2022
SCALE: 1/2	DWG. NO. DF24-TEMPLATE-RIVIAN	
SHT 1 OF 1		