SYM	CHANGES	DATE	BY

STROKE NOTE:
UNITS ARE BUILT IN 50mm INCREMENTS. IF ORDERING IN BETWEEN STROKES, FRAME WILL GO TO NEXT SIZE UP.
EXAMPLE: 51mm STROKE = 100mm FRAME

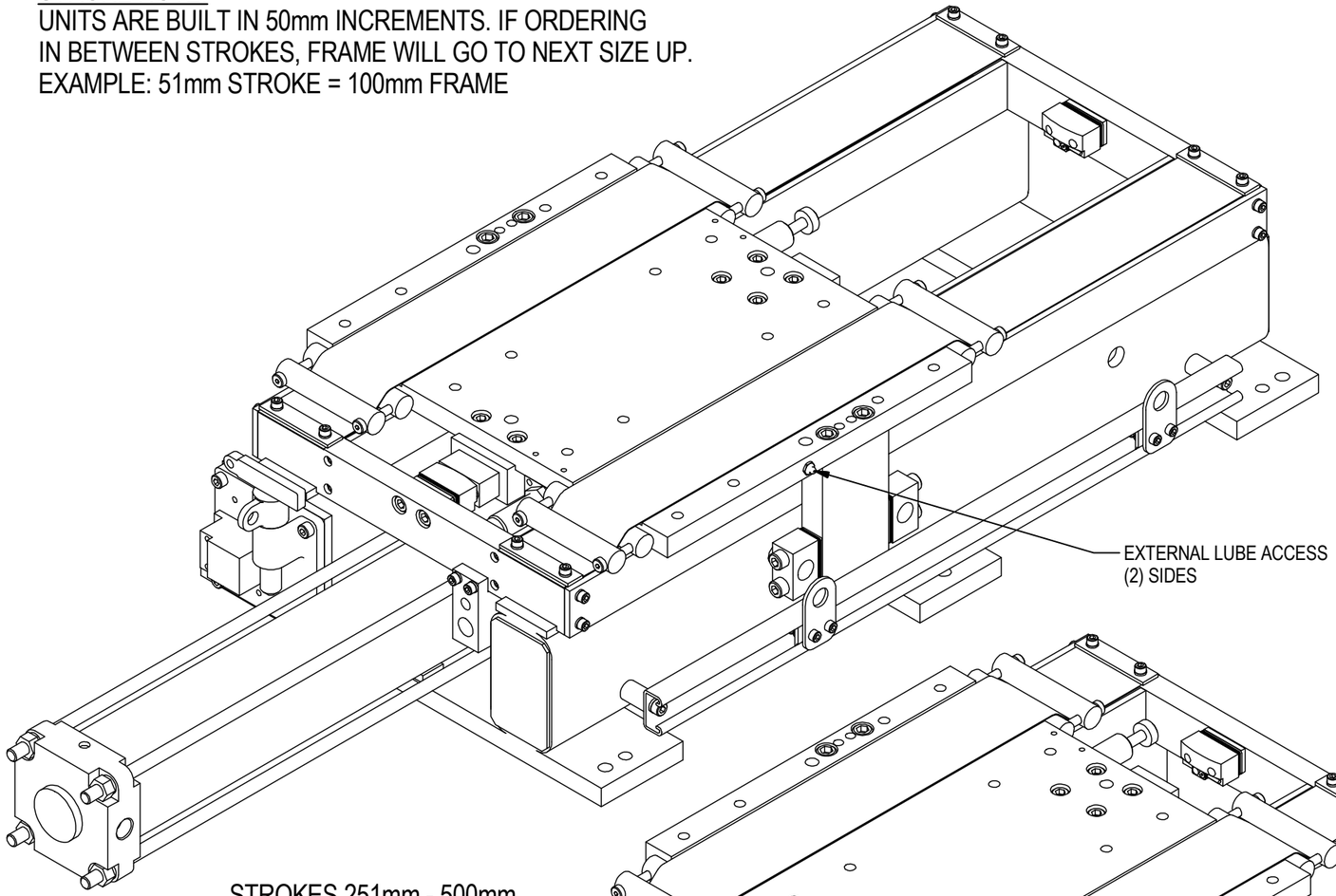

STROKES 251mm - 500mm
(300 BASE SHOWN)
(SEE SHTS 4 & 5)

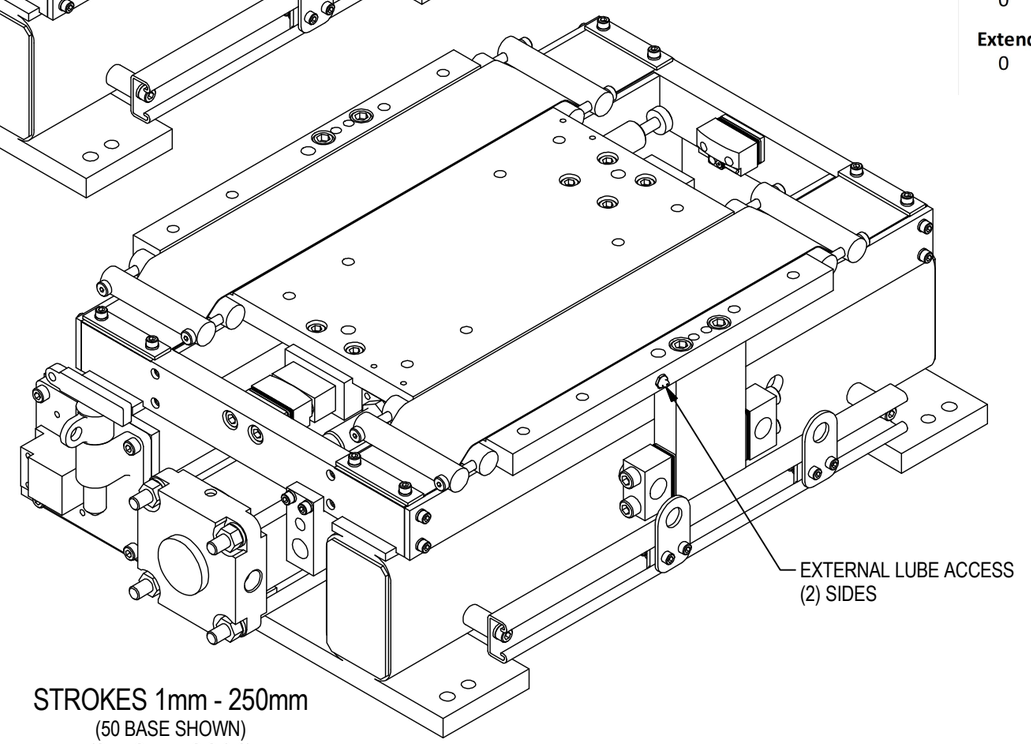

STROKES 1mm - 250mm
(50 BASE SHOWN)
(SEE SHEETS 2 & 3)

ORDERING INFORMATION

PS100 [ ][ ][ ] [ ][ ] [ ] [ ] [ ] [ ] [ ] [ ]

Stroke
001 50mm TO 500mm
In 1mm INCREMENTS
(See Stroke Note)

Cylinder Options
0G Non-Locking G Ports
LG Locking G Ports
0N Non-Locking NPT Ports
LN Locking NPT Ports

Switch
0 None
I Intelligent Stop (Lockout accessible both sides)

Switch Ready
0 None
R RH Side (Lockout accessible LH sides)
L LH Side (Lockout accessible RH sides)

Retract Shims - Whole mm
0 See Shim Chart

Retract Shims - Quarter mm
0 See Shim Chart

Extend Shims - Whole mm
0 See Shim Chart

Extend Shims - Quarter mm
0 See Shim Chart

SHORT STROKE SHIM CHART

WHOLE MILLIMETER CODE				QUARTER MM CODES	
CODE	THK-mm	CODE	THK-mm	CODE	THK-mm
0	0	G	16	0	0.00
1	1	H	17	A	0.25
2	2	J	18	B	0.50
3	3	K	19	C	0.75
4	4	L	20		
5	5	M	21		
6	6	N	22		
7	7	P	23		
8	8	R	24		
9	9	S	25		
A	10	T	26		
B	11	U	27		
C	12	V	28		
D	13	W	29		
E	14	X	30		
F	15				

E & E CUSTOM PRODUCTS
7200 MILLER DR.
WARREN, MI 48092
EE-CP.COM

NOTICE: THIS DRAWING IS PROPERTY OF E&E CUSTOM PRODUCTS INCLUDING THE PRINCIPLES OF THE DESIGN INVOLVED, AND IS SUBMITTED WITH AGREEMENT THAT IT IS NOT TO BE REPRODUCED, COPIED, OR LOANED, IN PART OR WHOLE, ACCEPTANCE OF THIS DRAWING WILL BE CONSTRUED AS AN AGREEMENT TO THE ABOVE

TITLE 100mm BORE PNEUMATIC SLIDE

PART NO.

DRAWN BY:	CHK'D BY:	APPR'D BY:
DATE:	DATE:	DATE:
SCALE: 1/5	DWG. NO. PS100-TEMPLATE	
SHT 1 OF 5		

SYM	CHANGES	DATE	BY

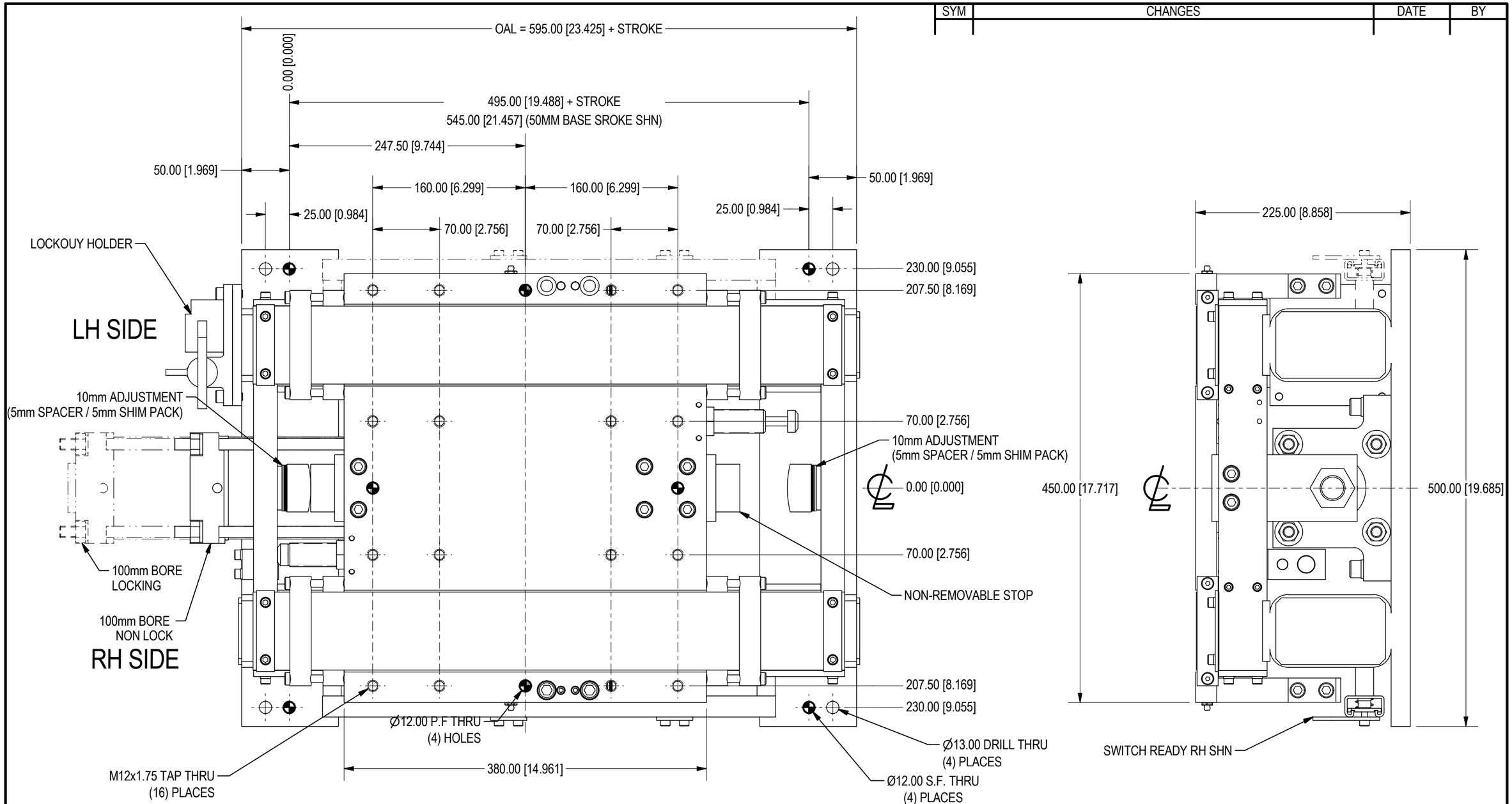

CYLINDER PORTS ALWAYS FACE RH SIDE

E&E CUSTOM PRODUCTS

7200 MILLER DR.
WARREN, MI 48092
EE-CP.COM

NOTICE: THIS DRAWING IS PROPERTY OF E&E CUSTOM PRODUCTS INCLUDING THE PRINCIPLES OF THE DESIGN INVOLVED, AND IS SUBMITTED WITH AGREEMENT THAT IT IS NOT TO BE REPRODUCED, COPIED, OR LOANED, IN PART OR WHOLE, ACCEPTANCE OF THIS DRAWING WILL BE CONSTRUED AS AN AGREEMENT TO THE ABOVE

TITLE: 100mm BORE PNEUMATIC SLIDE

PART NO.

DRAWN BY:	CHK'D BY:	APPR'D BY:
DATE:	DATE:	DATE:
SCALE: 1/4	DWG. NO. PS100-TEMPLATE	
SHT 2 OF 5		

SYM	CHANGES	DATE	BY

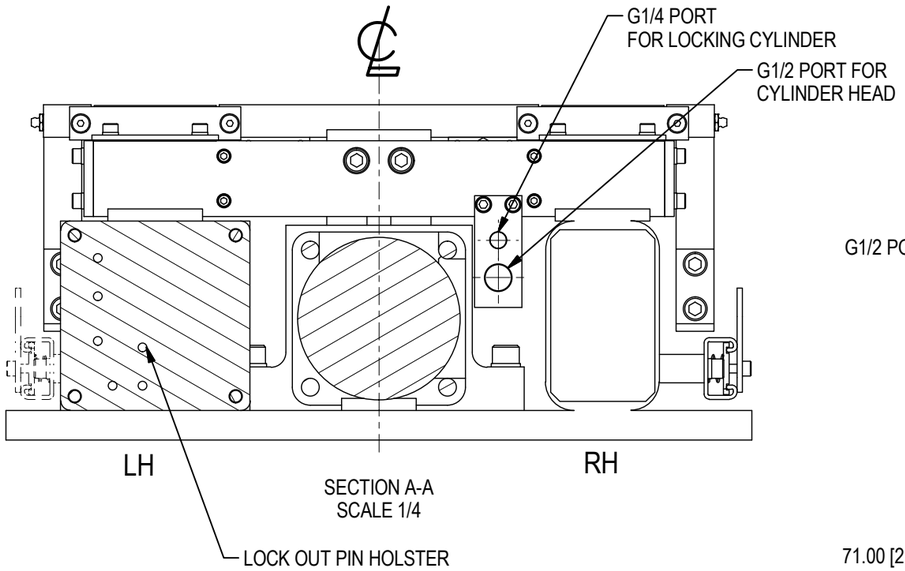

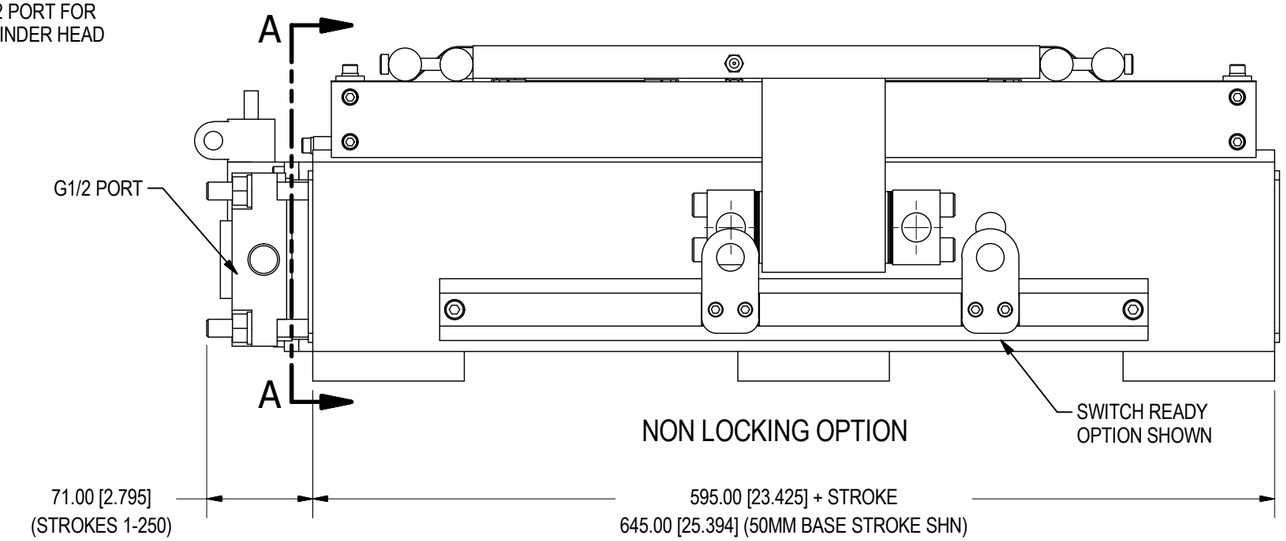

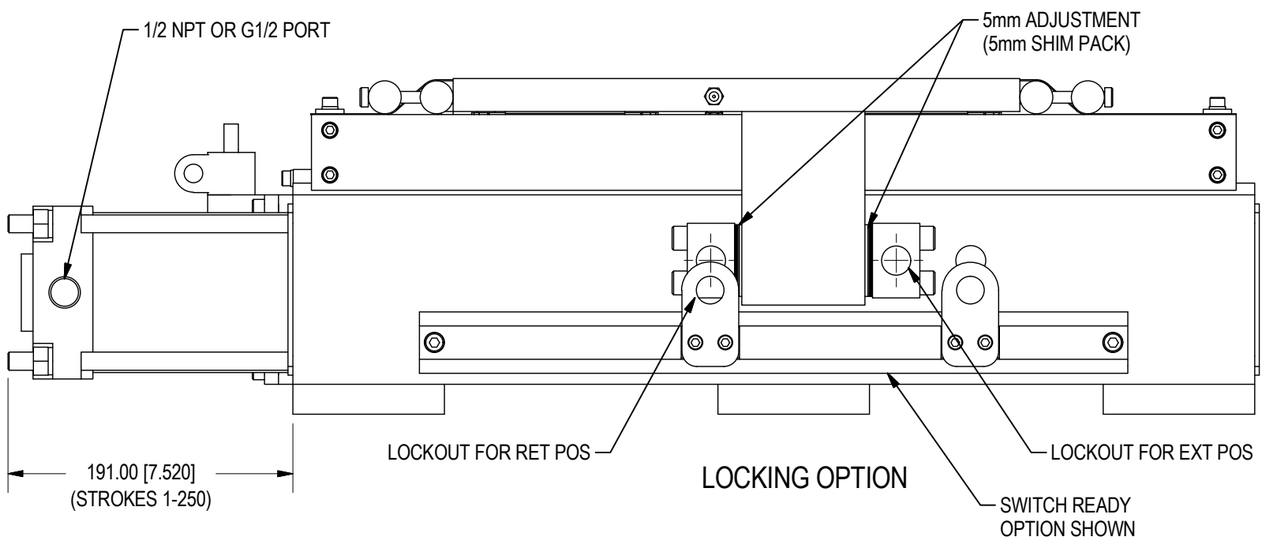

NOTE:
IF SHIMS ARE REMOVED FROM STOP BLOCK, SHIMS MUST ALSO BE REMOVED FROM LOCKOUT CLOSEST TO ALTERED STOP.
IF SHORT STROKE IS DESIRED, THE AMOUNT OF SHIMING ADDED TO THE STOP BLOCK ALSO NEEDS TO BE ADDED TO LOCKOUT BLOCK CLOSEST TO THE ALTERED STOP.

FOR STROKES BETWEEN 1mm - 250mm

E & E CUSTOM PRODUCTS

7200 MILLER DR.
WARREN, MI 48092
EE-CP.COM

NOTICE: THIS DRAWING IS PROPERTY OF E&E CUSTOM PRODUCTS INCLUDING THE PRINCIPLES OF THE DESIGN INVOLVED, AND IS SUBMITTED WITH AGREEMENT THAT IT IS NOT TO BE REPRODUCED, COPIED, OR LOANED, IN PART OR WHOLE, ACCEPTANCE OF THIS DRAWING WILL BE CONSTRUED AS AN AGREEMENT TO THE ABOVE

TITLE: 100mm BORE PNEUMATIC SLIDE

PART NO.

DRAWN BY:	CHK'D BY:	APPR'D BY:
DATE:	DATE:	DATE:
SCALE: 1/4	DWG. NO. PS100-TEMPLATE	
SHT 3 OF 5		

SYM	CHANGES	DATE	BY

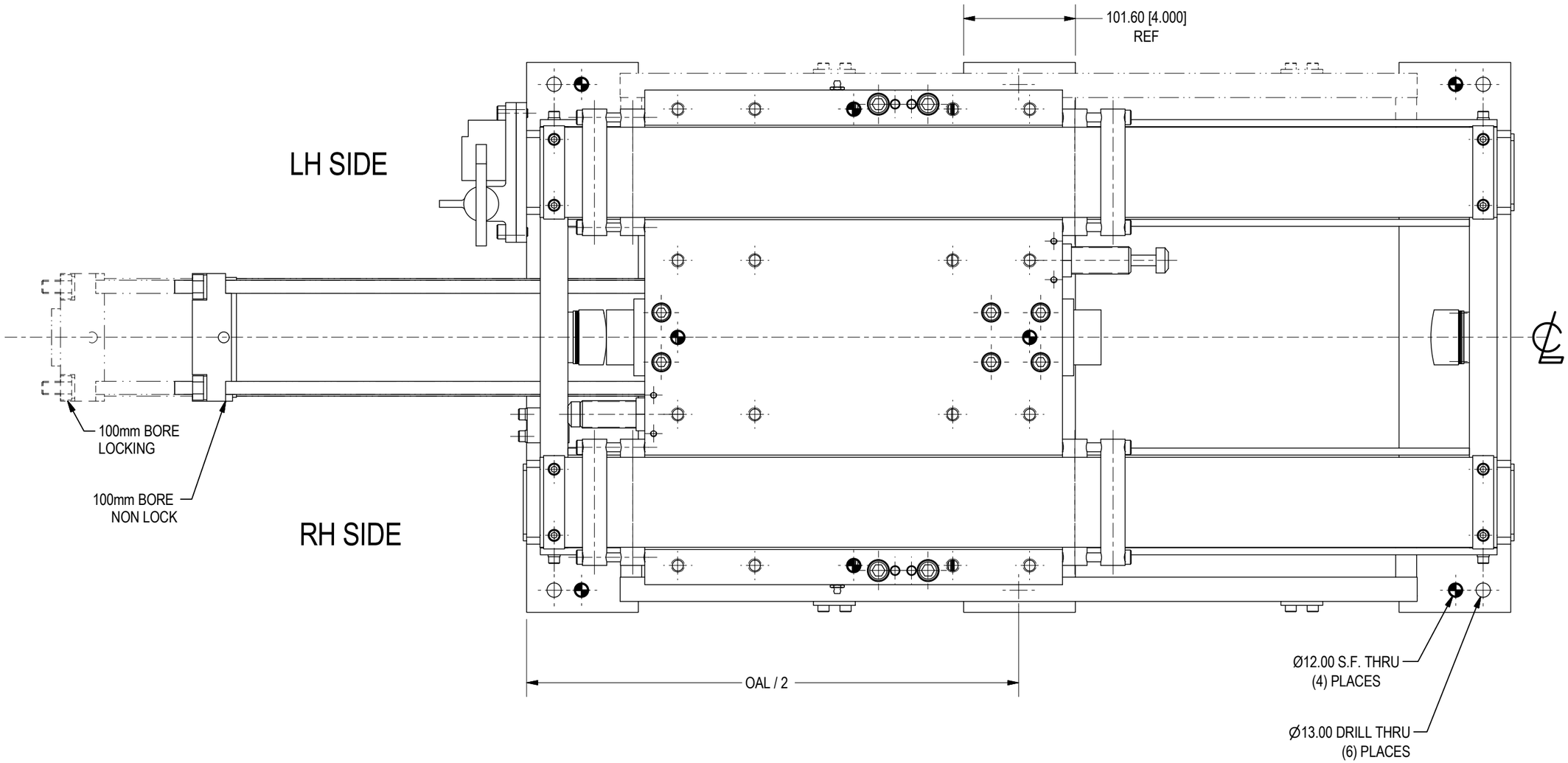

FOR STROKES BETWEEN 251mm - 500mm
SEE SHT 2 FOR BASE DIMENSIONS

E & E CUSTOM PRODUCTS	NOTICE: THIS DRAWING IS PROPERTY OF E&E CUSTOM PRODUCTS INCLUDING THE PRINCIPLES OF THE DESIGN INVOLVED, AND IS SUBMITTED WITH AGREEMENT THAT IT IS NOT TO BE REPRODUCED, COPIED, OR LOANED, IN PART OR WHOLE, ACCEPTANCE OF THIS DRAWING WILL BE CONSTRUED AS AN AGREEMENT TO THE ABOVE		
	TITLE 100mm BORE PNEUMATIC SLIDE		
	PART NO.		
	DRAWN BY:	CHK'D BY:	APPR'D BY:
7200 MILLER DR. WARREN, MI 48092 EE-CP.COM	DATE:	DATE:	DATE:
	SCALE: 1/4	DWG. NO. PS100-TEMPLATE	
	SHT 4 OF 5		

SYM	CHANGES	DATE	BY

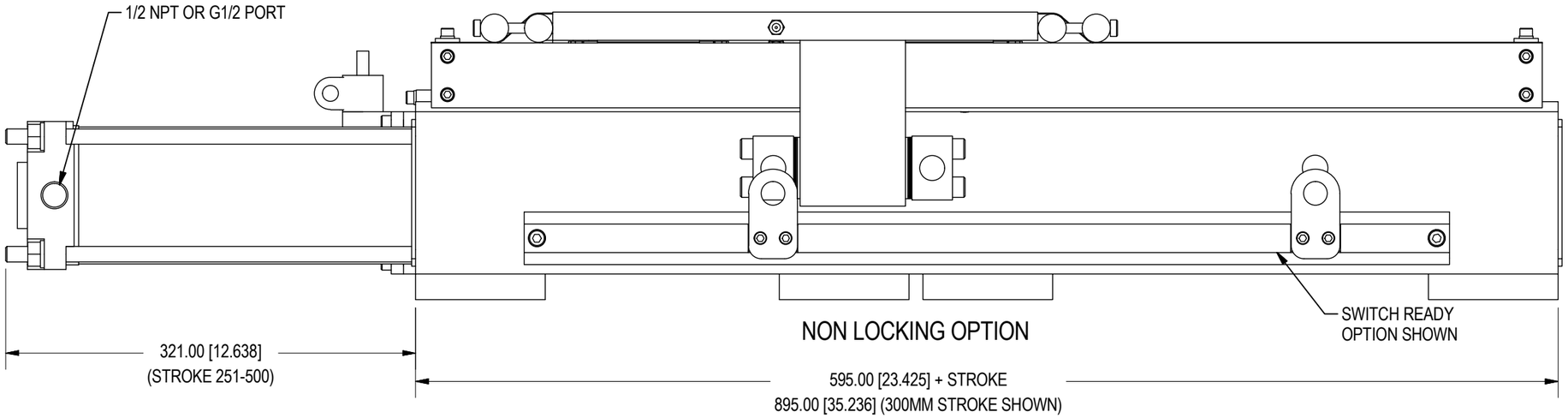

NON LOCKING OPTION

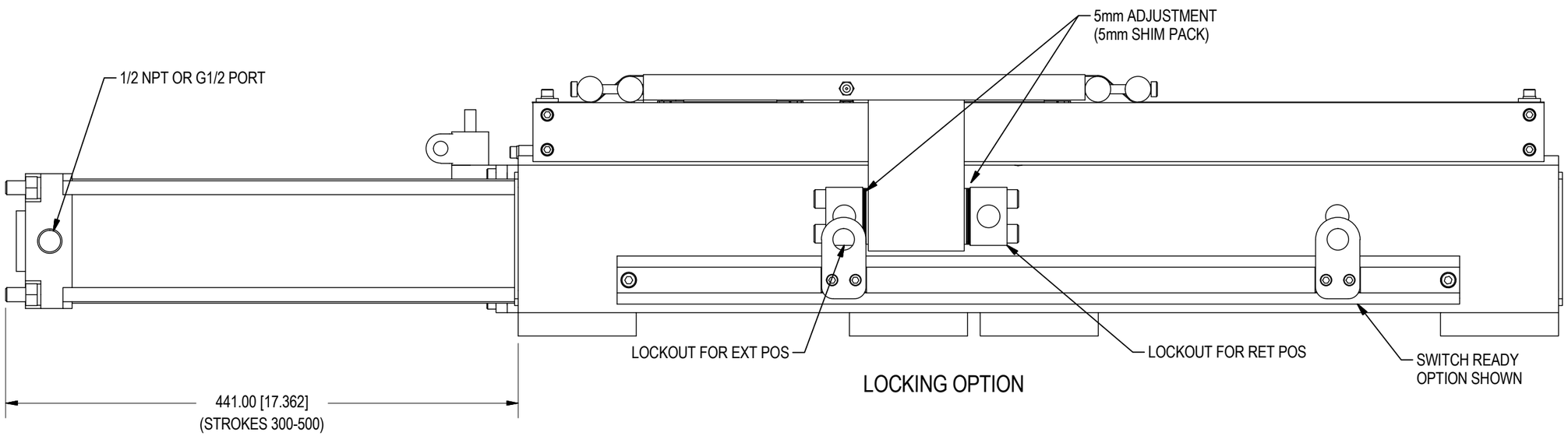

LOCKING OPTION

NOTE:
IF SHIMS ARE REMOVED FROM STOP BLOCK, SHIMS MUST ALSO BE REMOVED FROM LOCKOUT CLOSEST TO ALTERED STOP.
IF SHORT STROKE IS DESIRED, THE AMOUNT OF SHIMING ADDED TO THE STOP BLOCK ALSO NEEDS TO BE ADDED TO LOCKOUT BLOCK CLOSEST TO THE ALTERED STOP.

FOR STROKES BETWEEN 251mm - 500mm

E & E CUSTOM PRODUCTS

7200 MILLER DR.
WARREN, MI 48092
EE-CP.COM

NOTICE: THIS DRAWING IS PROPERTY OF E&E CUSTOM PRODUCTS INCLUDING THE PRINCIPLES OF THE DESIGN INVOLVED, AND IS SUBMITTED WITH AGREEMENT THAT IT IS NOT TO BE REPRODUCED, COPIED, OR LOANED, IN PART OR WHOLE, ACCEPTANCE OF THIS DRAWING WILL BE CONSTRUED AS AN AGREEMENT TO THE ABOVE

TITLE: 100mm BORE PNEUMATIC SLIDE

PART NO.

DRAWN BY:	CHK'D BY:	APPR'D BY:
DATE:	DATE:	DATE:
SCALE: 1/4	DWG. NO. PS100-TEMPLATE	
SHT 5 OF 5		