SYM	CHANGES	DATE	BY

25mm WIDE INTELLIGENT STOPS

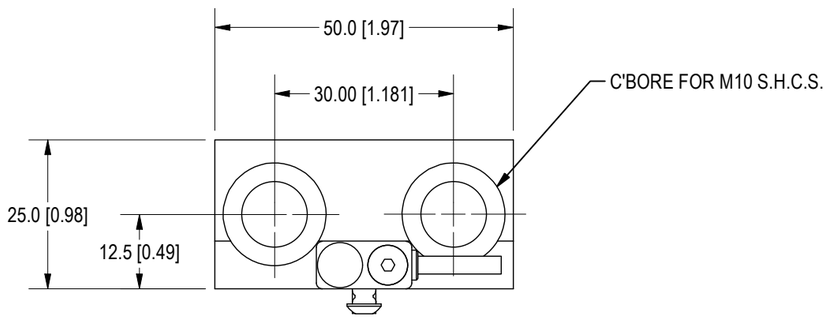

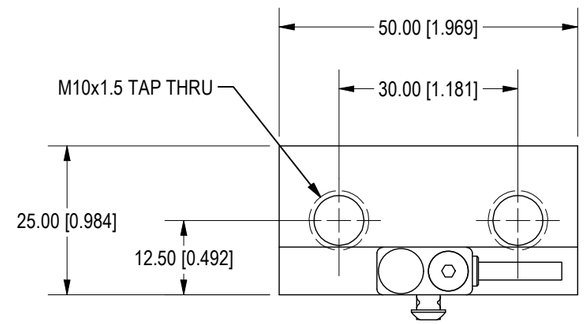

25mm WIDE ORDERING INFORMATION

A S [ ] 0 2 [ ] I S

Type
- C Crown Block
- F Flat Block

Holes
- 0 C'Bore
- 1 Tapped

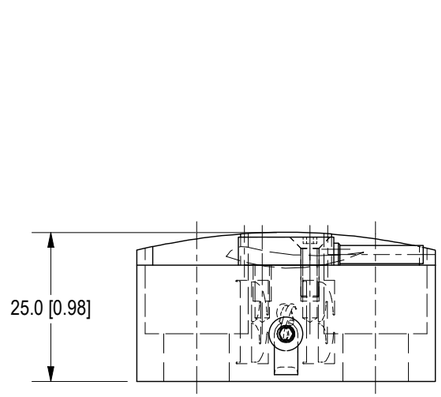

ASC020-IS
CROWNED W/ C'BORE

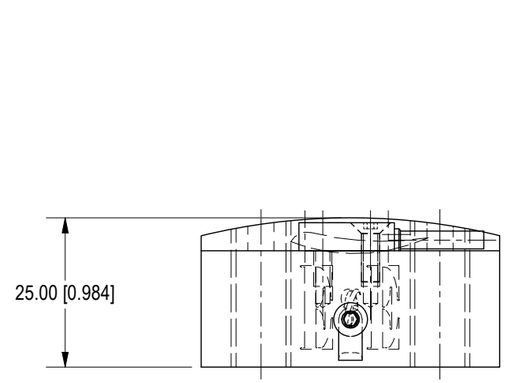

ASC021-IS
CROWNED W/ TAPS

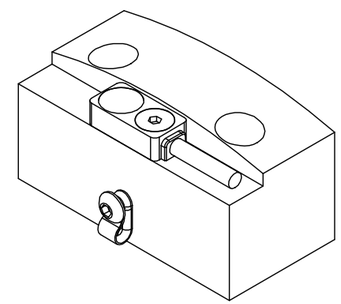

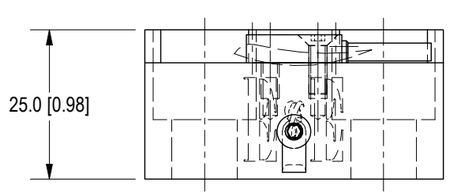

ASF020-IS
FLAT W/ C'BORE

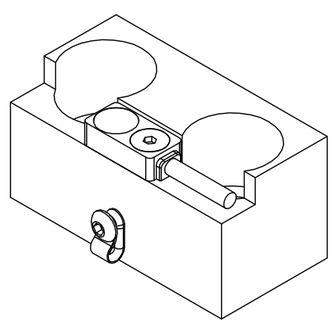

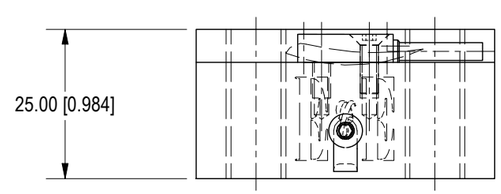

ASF021-IS
FLAT W/ TAPS

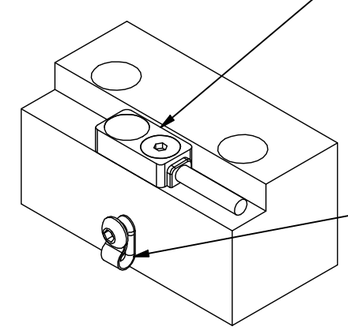

E&E CUSTOM PRODUCTS

7200 MILLER DR.
WARREN, MI 48092
EE-CP.COM

NOTICE: THIS DRAWING IS PROPERTY OF E&E CUSTOM PRODUCTS INCLUDING THE PRINCIPLES OF THE DESIGN INVOLVED, AND IS SUBMITTED WITH AGREEMENT THAT IT IS NOT TO BE REPRODUCED, COPIED, OR LOANED, IN PART OR WHOLE, ACCEPTANCE OF THIS DRAWING WILL BE CONSTRUED AS AN AGREEMENT TO THE ABOVE

TITLE: 25mm WIDE INTELLIGENT STOPS

PART NO.

DRAWN BY: EE	CHK'D BY: EC	APPR'D BY: MH
DATE: 9/14/2022	DATE: 3/9/2023	DATE: 3/9/2023
SCALE: 1	DWG. NO. 25mm WIDE INTELLIGENT STOPS - STELLANTIS	
SHT 1 OF 1		