SYM	CHANGES	DATE	BY

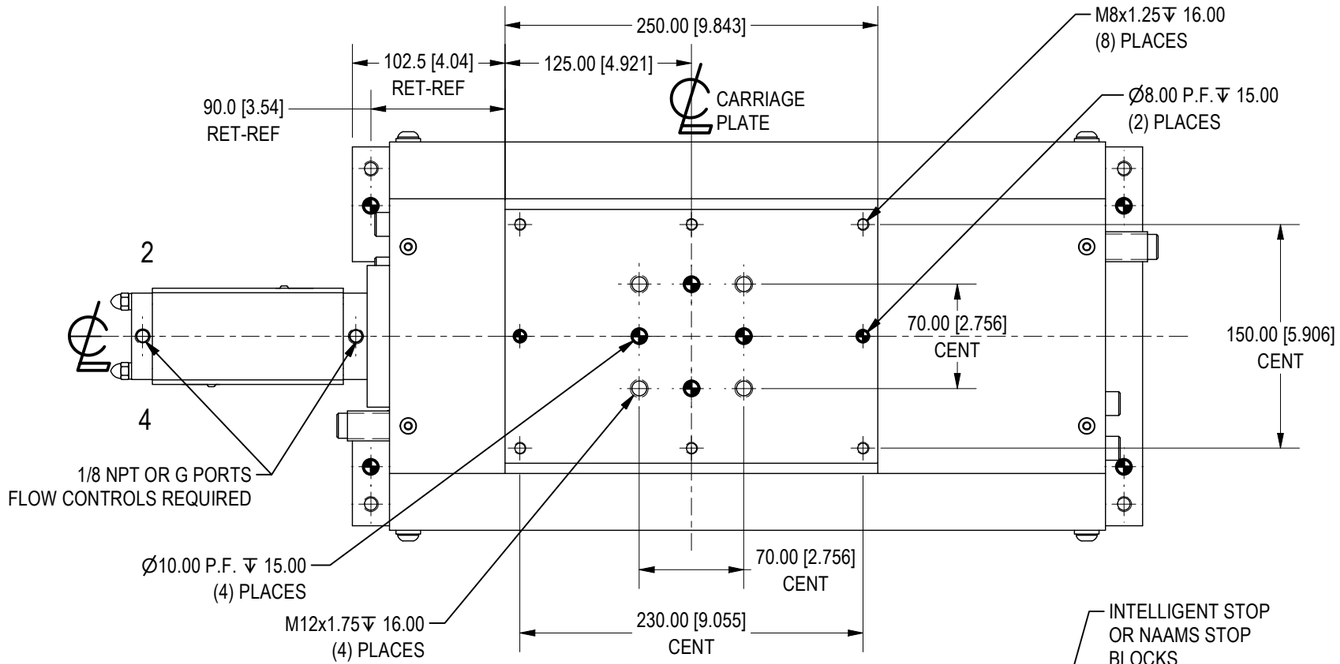

NAAMS COMPLIANT CARRIAGE PLATE

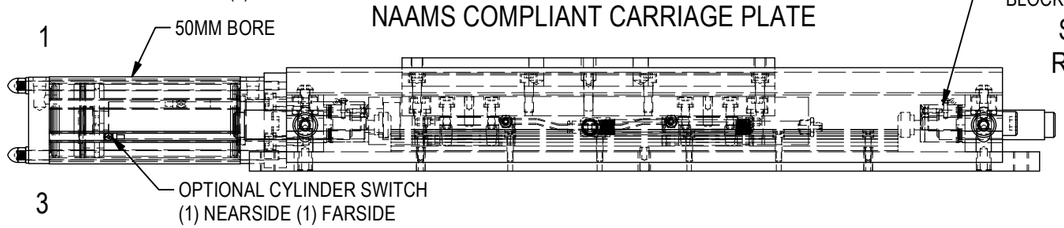

SEE SHEET 2 FOR ALTERNATIVE DIRECT
REPLACEMENT CARRIAGE PLATE OPTION

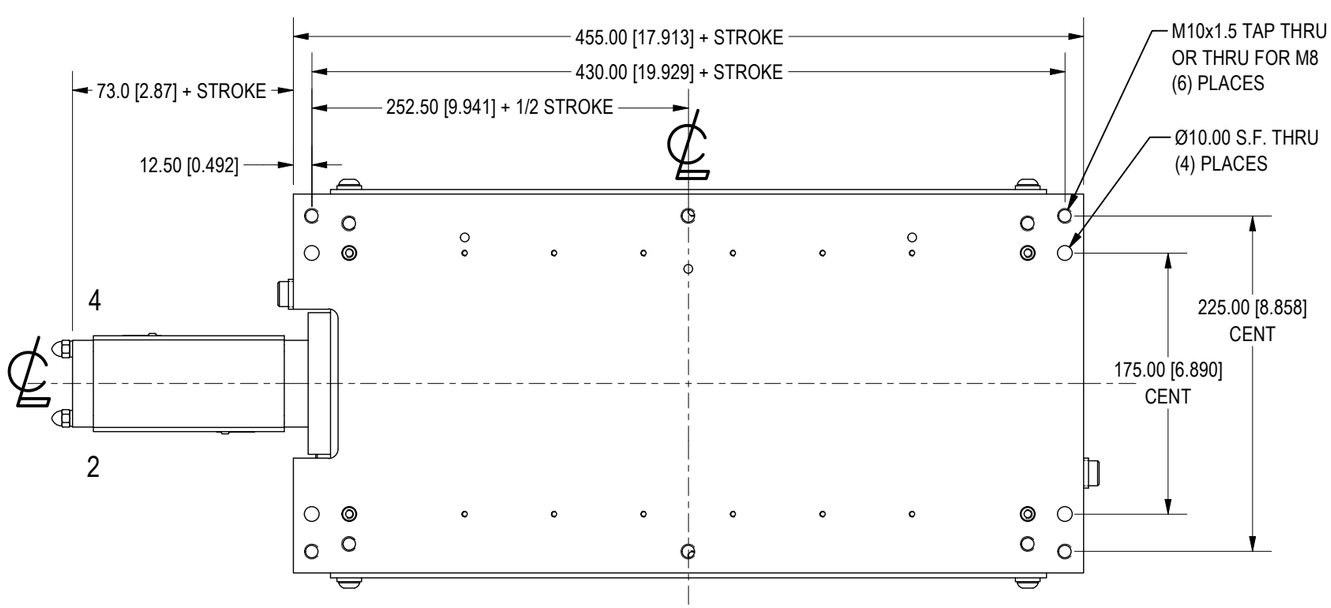

ORDERING INFORMATION

MS1 - [ ] [ ] N [ ] [ ] [ ] [ ] [ ] I 0 N

Stroke
075, 135, 195, 255, 315, 375, 440, 495

Actuator
N Pneumatic - NPT Ports

Port Position
1 Port Position (Shown)
2 Port Position
3 Port Position
4 Port Position

Retract Shims - Whole mm
0 See Shim Chart

Retract Shims - Quarter mm
0 See Shim Chart

Extend Shims - Whole mm
0 See Shim Chart

Extend Shims - Quarter mm
0 See Shim Chart

Carriage Plate
N NAAMS Compliant (Standard)

Cyl Switch
0 None

Stops
I Intelligent Stop

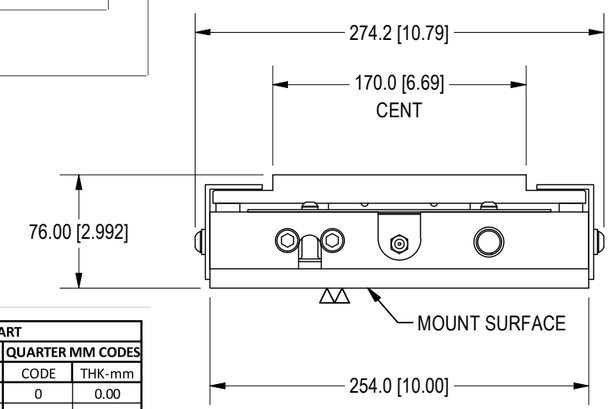

SHORT STROKE SHIM CHART

WHOLE MILLIMETER CODE				QUARTER MM CODES	
CODE	THK-mm	CODE	THK-mm	CODE	THK-mm
0	0	G	16	0	0.00
1	1	H	17	A	0.25
2	2	J	18	B	0.50
3	3	K	19	C	0.75
4	4	L	20		
5	5	M	21		
6	6	N	22		
7	7	P	23		
8	8	R	24		
9	9	S	25		
A	10	T	26		
B	11	U	27		
C	12	V	28		
D	13	W	29		
E	14	X	30		
F	15				

APPROXIMATE UNIT WEIGHTS PER STROKE

STROKE	075	135	195	255	315	375	435	495
STD PLATE	44lbs	47lbs	50lbs	53lbs	56lbs	59lbs	62lbs	65lbs
NAAMS PLATE	46lbs	49lbs	52lbs	55lbs	58lbs	61lbs	64lbs	67lbs

E&E CUSTOM PRODUCTS

7200 MILLER DR.
WARREN, MI 48092
EE-CP.COM

NOTICE: THIS DRAWING IS PROPERTY OF E&E CUSTOM PRODUCTS INCLUDING THE PRINCIPLES OF THE DESIGN INVOLVED, AND IS SUBMITTED WITH AGREEMENT THAT IT IS NOT TO BE REPRODUCED, COPIED, OR LOANED, IN PART OR WHOLE, ACCEPTANCE OF THIS DRAWING WILL BE CONSTRUED AS AN AGREEMENT TO THE ABOVE

TITLE: MINI SLIDE

PART NO.

DRAWN BY:	CHK'D BY: EC	APPR'D BY: MH
DATE: 3/27/2023	DATE: 3/27/2023	DATE: 3/27/2023
SCALE: 1/4	DWG. NO. MS1-TEMPLATE GESTAMP	
SHT 1 OF 2		

SYM	CHANGES	DATE	BY

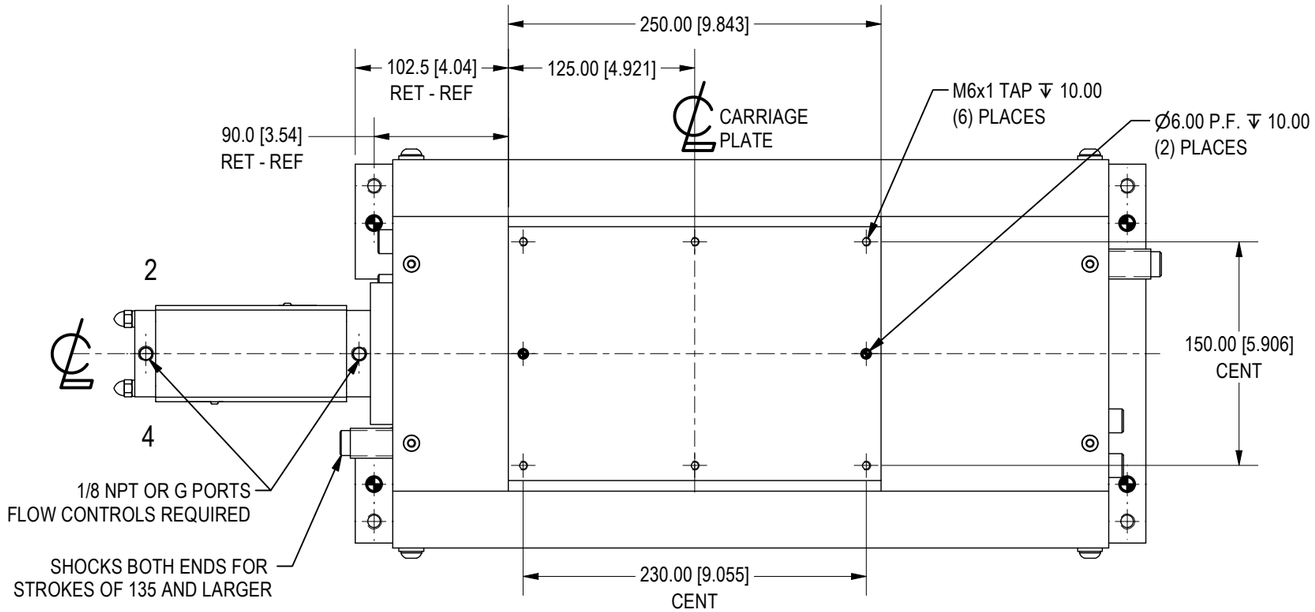

ORDERING INFORMATION

MS1 - [ ][ ][ ] N [ ] [ ] [ ] [ ] [ ] I 0 N

Stroke
075, 135, 195, 255, 315, 375, 440, 495

Actuator
N Pneumatic - NPT Ports

Port Position
1 Port Position (Shown)
2 Port Position
3 Port Position
4 Port Position

Retract Shims - Whole mm
0 See Shim Chart

Retract Shims - Quarter mm
0 See Shim Chart

Extend Shims - Whole mm
0 See Shim Chart

Extend Shims - Quarter mm
0 See Shim Chart

Stops
I Intelligent Stop

Cyl Switch
0 None

Carriage Plate
N NAAMS Compliant (Standard)

ALTERNATIVE DIRECT REPLACEMENT CARRIAGE PLATE

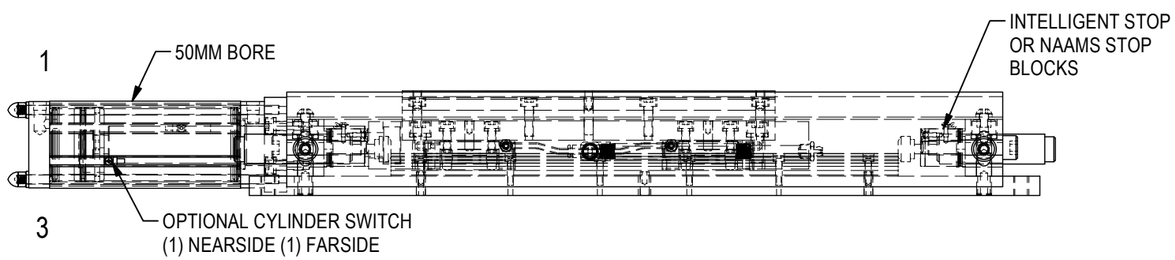

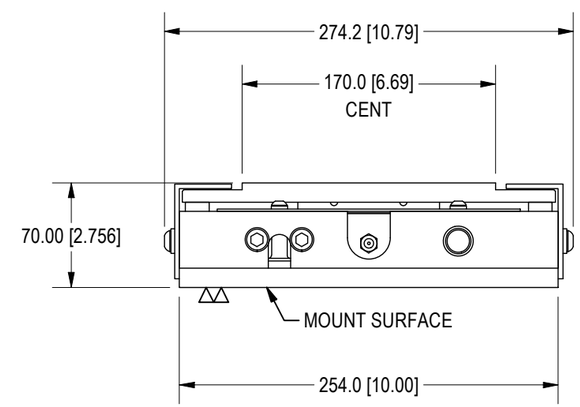

250.0 lb MAX LOAD

E & E CUSTOM PRODUCTS

7200 MILLER DR.
WARREN, MI 48092
EE-CP.COM

NOTICE: THIS DRAWING IS PROPERTY OF E&E CUSTOM PRODUCTS INCLUDING THE PRINCIPLES OF THE DESIGN INVOLVED, AND IS SUBMITTED WITH AGREEMENT THAT IT IS NOT TO BE REPRODUCED, COPIED, OR LOANED, IN PART OR WHOLE, ACCEPTANCE OF THIS DRAWING WILL BE CONSTRUED AS AN AGREEMENT TO THE ABOVE

TITLE: MINI SLIDE

PART NO.

DRAWN BY:	CHK'D BY: EC	APPR'D BY: MH
DATE: 3/27/2023	DATE: 3/27/2023	DATE: 3/27/2023
SCALE: 1/4	DWG. NO. MS1-TEMPLATE GESTAMP	
SHT 2 OF 2		