SYM	CHANGES	DATE	BY

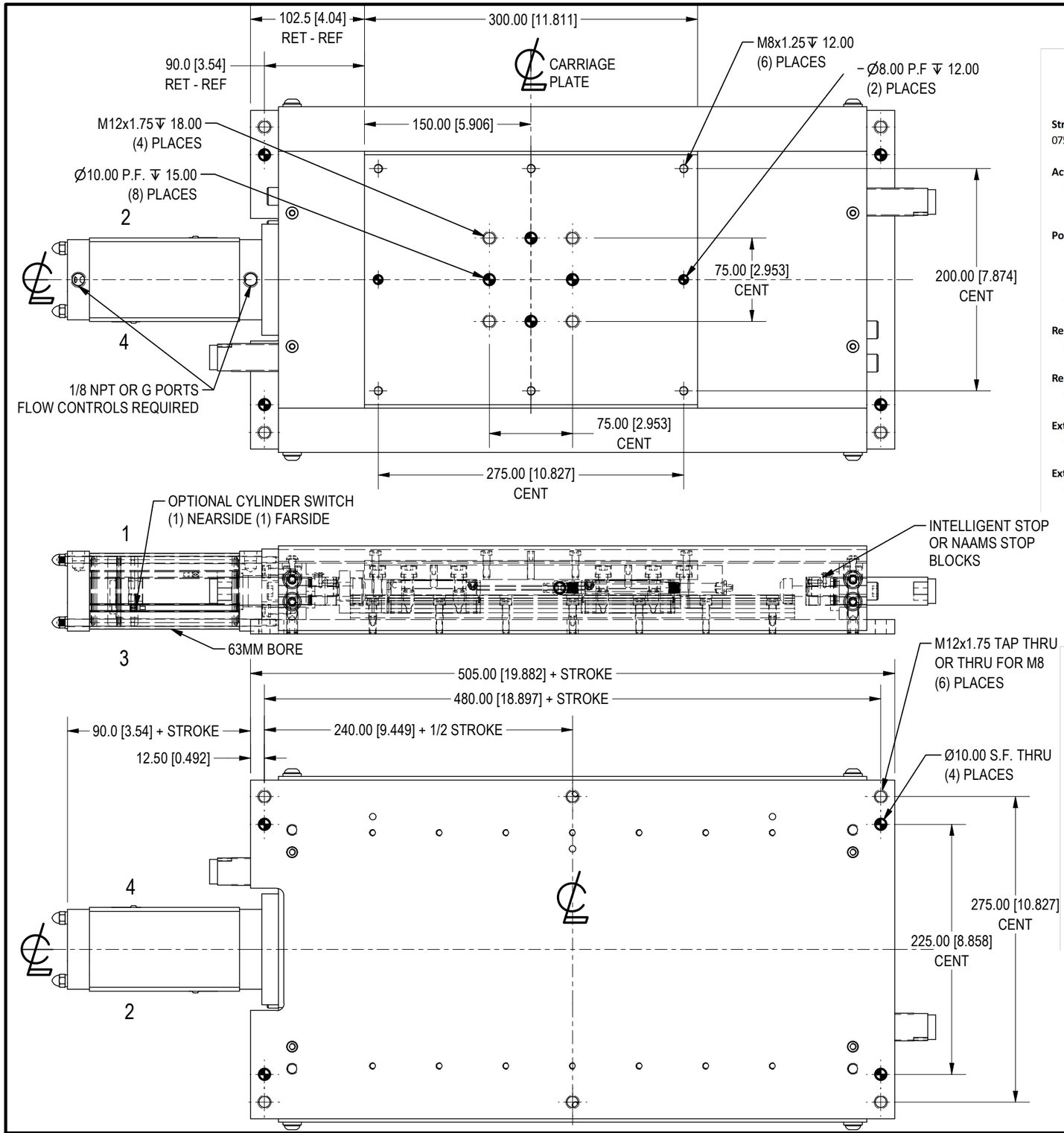

ORDERING INFORMATION

MS2 - [ ] [ ] [ ] N [ ] [ ] [ ] [ ] [ ] [ ] [ ] N

Stroke
075, 135, 195, 255, 315, 375, 440, 495

Actuator
N Pneumatic - NPT Ports

Port Position
1 Port Position (Shown)
2 Port Position
3 Port Position
4 Port Position

Retract Shims - Whole mm
0 See Shim Chart

Retract Shims - Quarter mm
0 See Shim Chart

Extend Shims - Whole mm
0 See Shim Chart

Extend Shims - Quarter mm
0 See Shim Chart

Cyl Switch
0 None

Stops
I Intelligent Stop

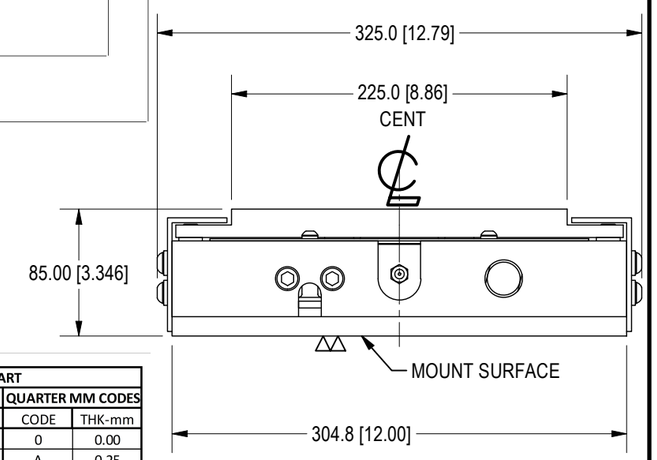

SHORT STROKE SHIM CHART

WHOLE MILLIMETER CODE				QUARTER MM CODES	
CODE	THK-mm	CODE	THK-mm	CODE	THK-mm
0	0	G	16	0	0.00
1	1	H	17	A	0.25
2	2	J	18	B	0.50
3	3	K	19	C	0.75
4	4	L	20		
5	5	M	21		
6	6	N	22		
7	7	P	23		
8	8	R	24		
9	9	S	25		
A	10	T	26		
B	11	U	27		
C	12	V	28		
D	13	W	29		
E	14	X	30		
F	15				

APPROXIMATE UNIT WEIGHT PER STROKE

STROKE	075	135	195	255	315	375	435	495
	72lbs	76lbs	79bs	83lbs	87lbs	91lbs	95lbs	98lbs

E & E CUSTOM PRODUCTS

7200 MILLER DR.
WARREN, MI 48092
EE-CP.COM

NOTICE: THIS DRAWING IS PROPERTY OF E&E CUSTOM PRODUCTS INCLUDING THE PRINCIPLES OF THE DESIGN INVOLVED, AND IS SUBMITTED WITH AGREEMENT THAT IT IS NOT TO BE REPRODUCED, COPIED, OR LOANED, IN PART OR WHOLE, ACCEPTANCE OF THIS DRAWING WILL BE CONSTRUED AS AN AGREEMENT TO THE ABOVE

TITLE: MINI SLIDE

PART NO.

DRAWN BY:	CHK'D BY: EC	APPR'D BY: MH
DATE: 3/27/2023	DATE: 3/27/2023	DATE: 3/27/2023
SCALE: 1/4	DWG. NO. MS2-TEMPLATE GESTAMP	
SHT 1 OF 1		