ORDERING INFORMATION

SWP	-	0	5	0	1						L				N	S

Pin Style
- D 3-Finger Contact Datum
- C 2-Finger Contact 2-way
- M 3-Finger Contact - Floating Pin

Part Hole Size
- 7.90-13.20
- (9.00mm Dia Shown)

Actuator Option
- L Locking Option

Mounting Option
- 0 No Mounting option - (Pin Clamp Only)
- S Standard (Pilot mounted)
- I Inverted mount
- T Top mount

Switch
- S Sick (Standard) Weld Immune

Ports
- N NPT Ports

Port Position
- 1 Port Position
- 2 Port Position (Shown)
- 3 Port Position

SYM	CHANGES	DATE	BY

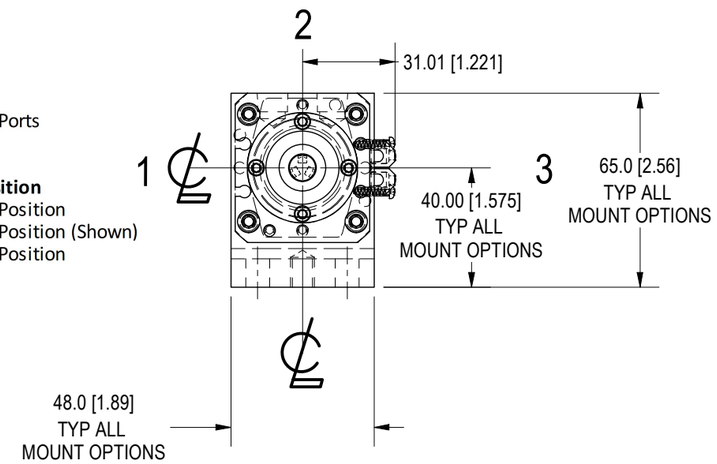

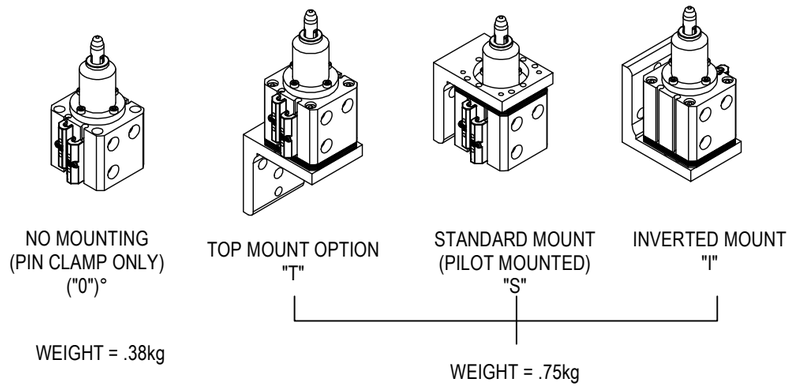

INDIVIDUAL MOUNTING BRACKET
ORDER AS - SWPD05

5MM SHIM PACK
ORDER AS - SWPZ0501-S5

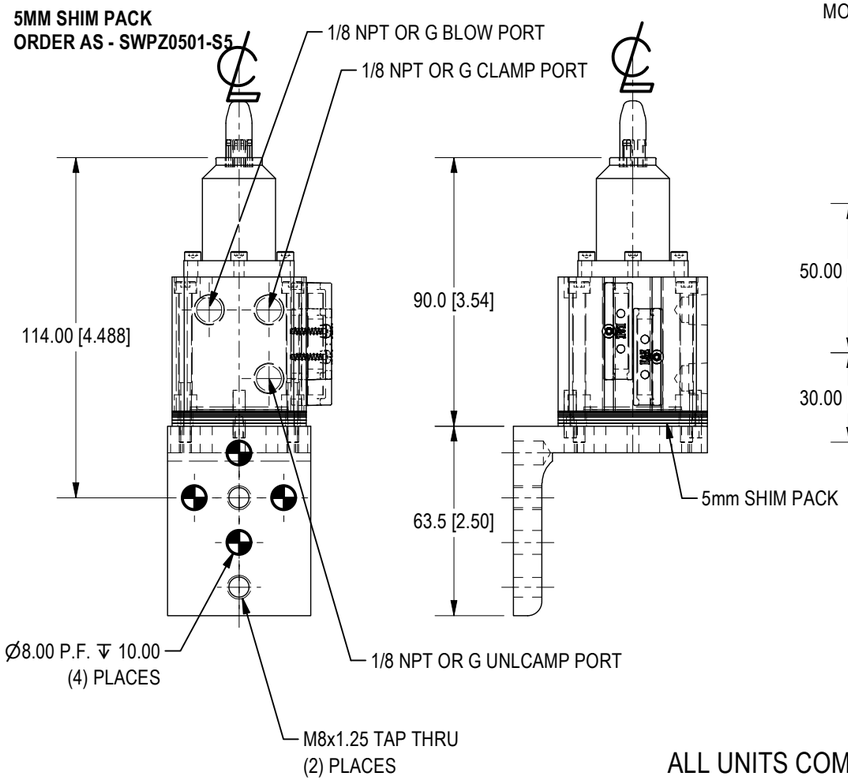

TOP MOUNT OPTION

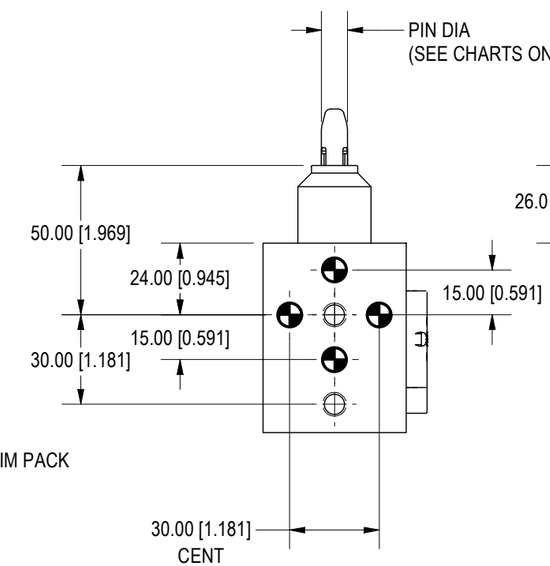

STANDARD MOUNT OPTION
(PILOT MOUNTED)

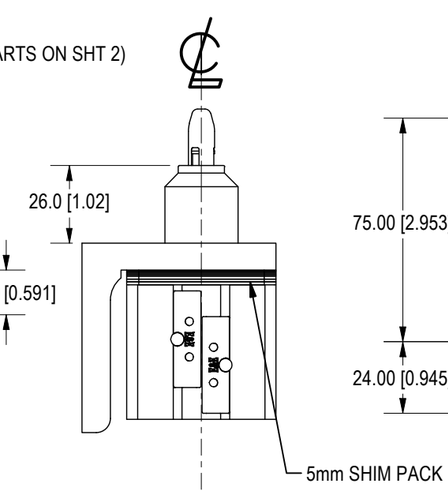

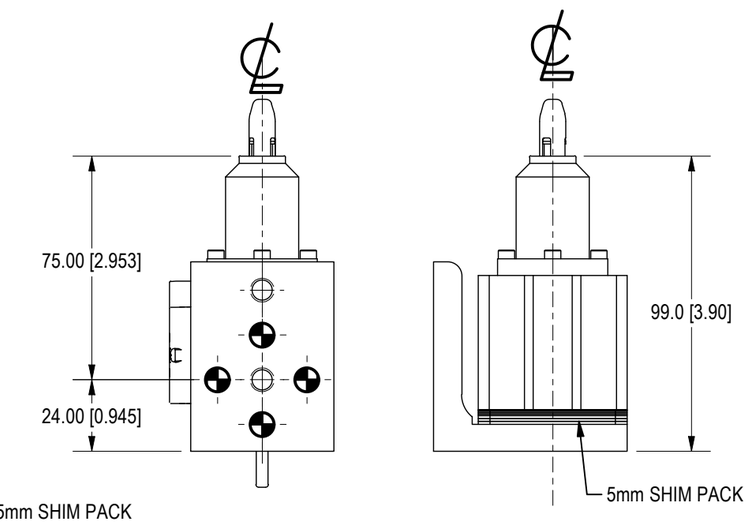

INVERTED MOUNT OPTION

ALL UNITS COME STANDARD WITH A 5mm SHIM PACK CONSISTING OF:
(2) 0.25mm (3) 0.50mm (3) 1.00mm

SEE FOLLOWING SHEETS FOR ADDITIONAL INFORMATION

NOTICE: THIS DRAWING IS PROPERTY OF E&E CUSTOM PRODUCTS INCLUDING THE PRINCIPLES OF THE DESIGN INVOLVED, AND IS SUBMITTED WITH AGREEMENT THAT IT IS NOT TO BE REPRODUCED, COPIED, OR LOANED, IN PART OR WHOLE, ACCEPTANCE OF THIS DRAWING WILL BE CONSTRUED AS AN AGREEMENT TO THE ABOVE

E&E CUSTOM PRODUCTS
7200 MILLER DR.
WARREN, MI 48092
EE-CP.COM

TITLE	0501 SERIES PIN CLAMP		
PART NO.			
DRAWN BY: EE	CHK'D BY: EC	APPR'D BY: MH	
DATE: 3/27/2023	DATE: 3/27/2023	DATE: 3/27/2023	
SCALE: 1 / 2	DWG. NO.	SWP0501-TEMPLATE GESTAMP	
SHT 1 OF 1			