SYM	CHANGES	DATE	BY

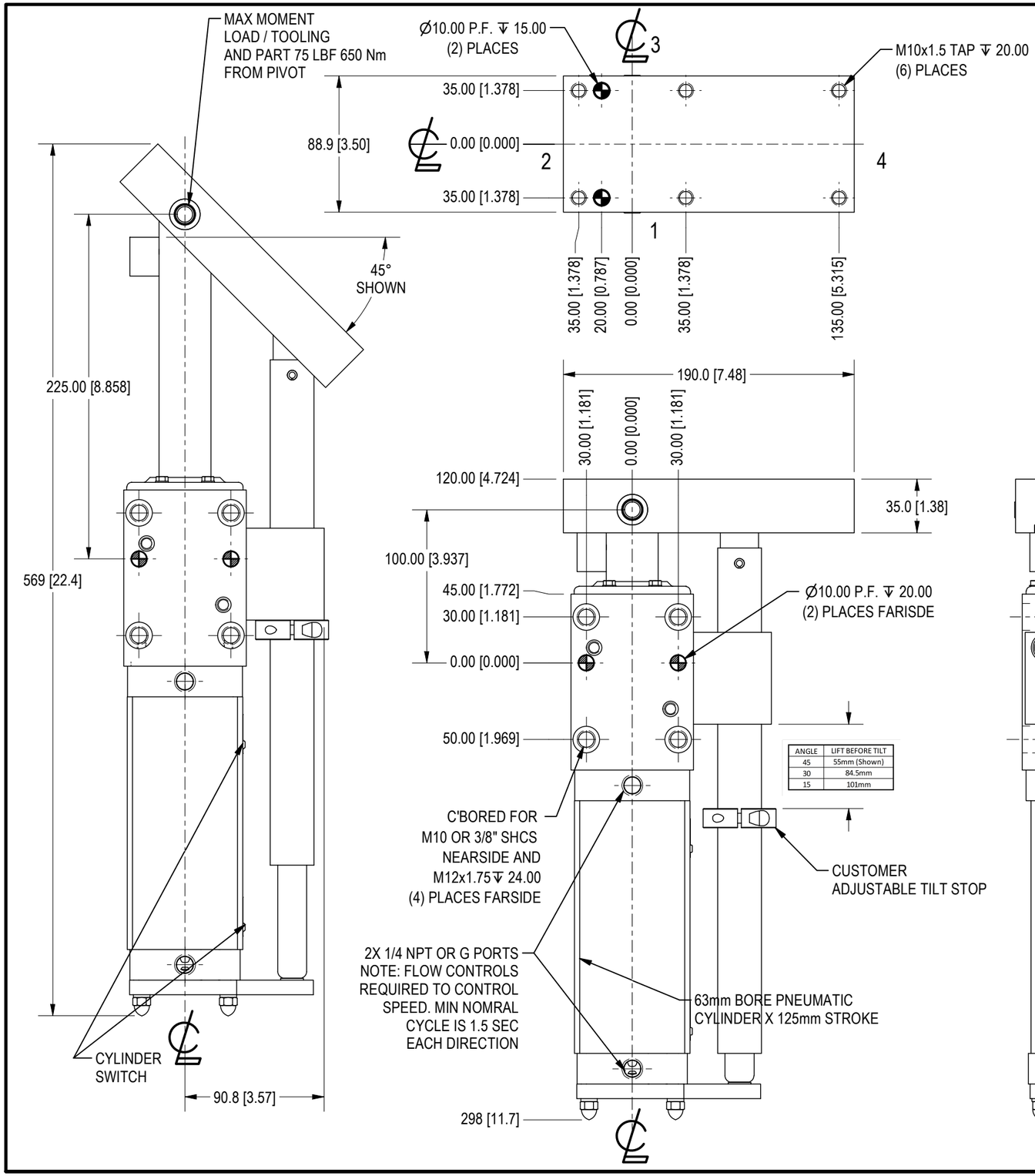

ANGLE	LIFT BEFORE TILT
45	55mm (Shown)
30	84.5mm
15	101mm

ORDERING INFORMATION

PPE - [ ][ ][ ] [ ] [ ] [ ] [ ] [ ] 0

Tip Angle Degree
045 (005 - 045 max)

Actuator
- N Pneumatic - NPT Ports
- G Pneumatic - G Ports

Tip Position

Note	Tilt and port position cannot be the same
1	Tilt Position
2	Tilt Position
4	Tilt Position (Shown)

Switch
- S Sick (Standard) Weld Immune
- B Balluff
- E Efector Weld Immune
- T Turck

Switch Position
- E S01 Ext Pos
- R S01 Ret Pos
- S01 Ret Pos

Port Position

Note	Tilt and port position cannot be the same
1	Port Position (Shown)
2	Port Position
3	Port Position
4	Port Position

BALANCED TOOLING MAX WIDTH IS 1000.0mm
FOR EXTRA LONG PARTS, EJECTORS CAN BE
USED IN TANDEM. CONSULT WITH
E&E CUSTOM RODUCTS

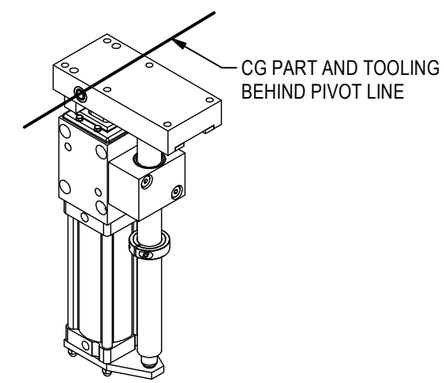

WEIGHT = 26 lbs

E&E CUSTOM PRODUCTS

7200 MILLER DR.
WARREN, MI 48092
EE-CP.COM

NOTICE: THIS DRAWING IS PROPERTY OF E&E CUSTOM PRODUCTS INCLUDING THE PRINCIPLES OF THE DESIGN INVOLVED, AND IS SUBMITTED WITH AGREEMENT THAT IT IS NOT TO BE REPRODUCED, COPIED, OR LOANED, IN PART OR WHOLE, ACCEPTANCE OF THIS DRAWING WILL BE CONSTRUED AS AN AGREEMENT TO THE ABOVE

TITLE: PNEUMATIC PART EJECTOR

PART NO.

DRAWN BY: EE	CHK'D BY: EC	APPR'D BY: MH
DATE: 9/20/2022	DATE: 9/21/2023	DATE: 9/21/2023
SCALE: 1/3	DWG. NO. PPE-TEMPLATE	
SHT 1 OF 1		