SYM	CHANGES	DATE	BY

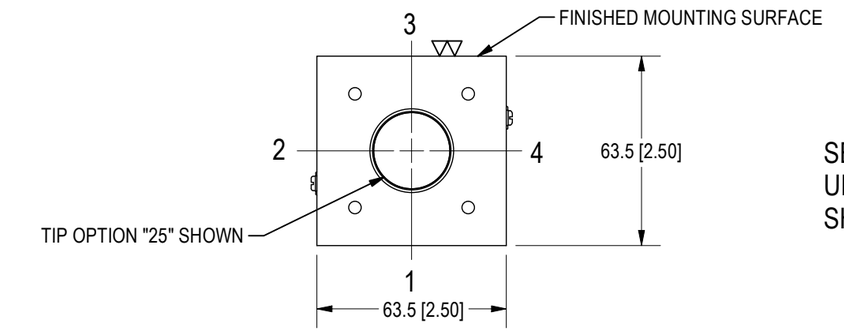

SET UP NOTE:
UNIT IS TO BE SET UP 10mm
SHORT OF FULL STROKE

ORDERING INFORMATION

AGB - [ ][ ][ ] [ ] [ ] [ ] [ ][ ] [ ] 0

Stroke
025 & 050mm

Actuator
- N Pneumatic - NPT Ports
- G Pneumatic - G Ports

Port Position
- 1 Port Position (shn)
- 2 Port Position
- 3 Port Position
- 4 Port Position

Regulator Option
- 0 None
- R Regulator

Tip Option
- 00 None
- 25 Flat Swivel Small 25mm Dia
- 38 Flat Swivel Med 38mm Dia (Std)
- 50 Flat Swivel Large 50mm Dia

Switch
- E Efector Weld Immune
- B Balluff
- S Sick (Standard) Weld Immune
- T Turck

NOTE: Switch is 90 degrees from port position, either side

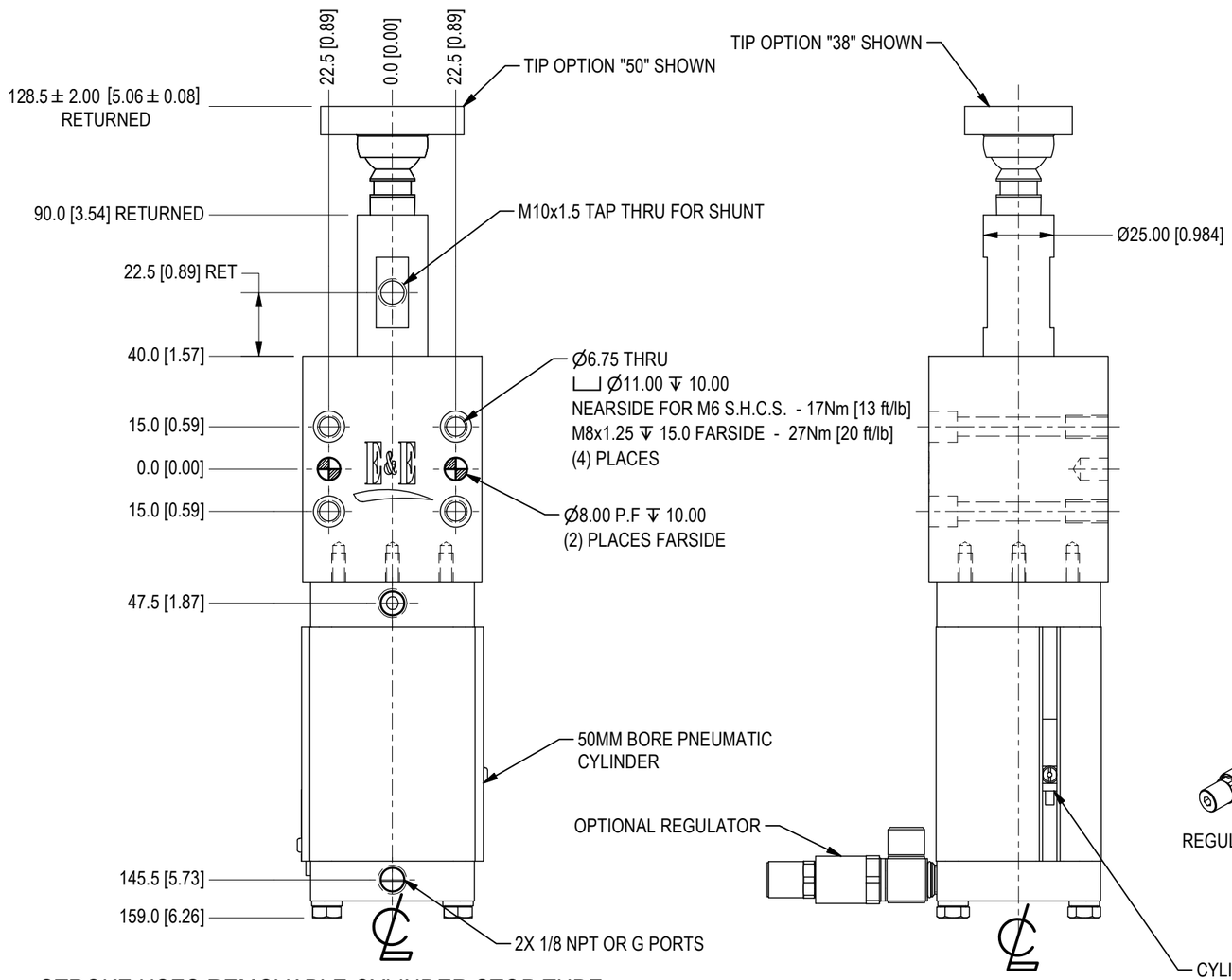

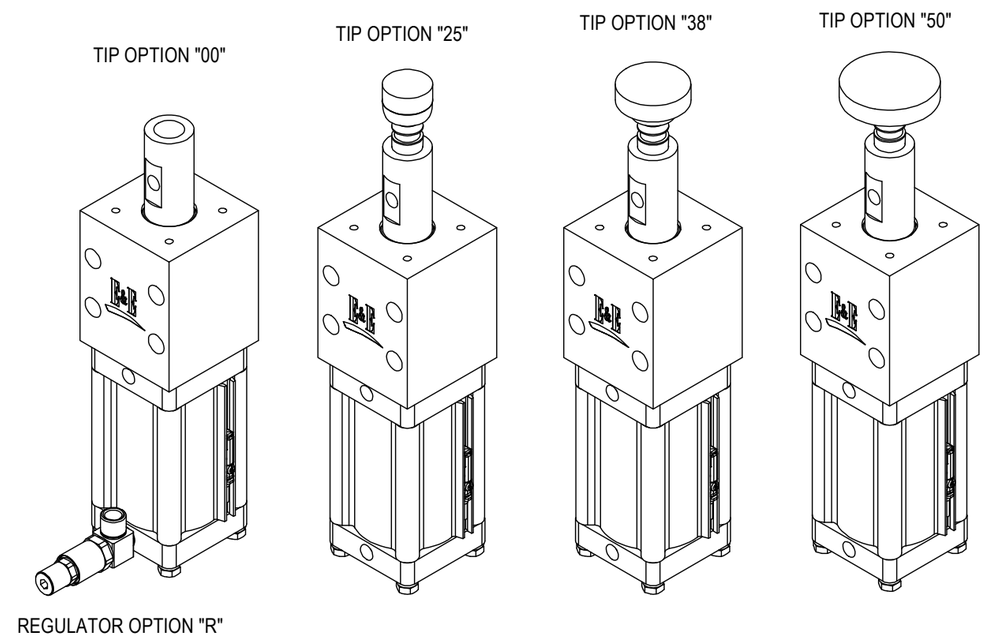

25mm STROKE USES REMOVABLE CYLINDER STOP TUBE
GROUNDING CAPACITY 1000 AMP FOR 15 SEC CONTINUOUS WITH 50% DUTY CYLCLE OR EQUIVALENT
OPERATING PRESSURE - USE OPTIONAL REGULATOR FOR MIN 15psi = 46lb [20.8kg] PART CONTACT FORCE
WEIGHT = 6.3lbs [2.9kg] MAX 120psi = 368lb [166.9kg] PART CONTACT FORCE

E&E CUSTOM PRODUCTS

7200 MILLER DR.
WARREN, MI 48092
EE-CP.COM

NOTICE: THIS DRAWING IS PROPERTY OF E&E CUSTOM PRODUCTS INCLUDING THE PRINCIPLES OF THE DESIGN INVOLVED, AND IS SUBMITTED WITH AGREEMENT THAT IT IS NOT TO BE REPRODUCED, COPIED, OR LOANED, IN PART OR WHOLE, ACCEPTANCE OF THIS DRAWING WILL BE CONSTRUED AS AN AGREEMENT TO THE ABOVE

TITLE: 50mm BORE PNEUMATIC GROUND CYLINDER

PART NO.

DRAWN BY:	CHK'D BY: EC	APPR'D BY: MH
DATE: 11/18/2020	DATE: 10/17/2023	DATE: 10/17/2023
SCALE: 1/3	DWG. NO. AGB TEMPLATE	
SHT 1 OF 1		