ORDERING INFORMATION

ASP24-[ ][ ][ ] [ ] D[ ][ ] [ ][ ][ ] [ ] [ ] [ ] 0 [ ] [ ] 0

Stroke
100 & 125

Actuator
- N Pneumatic - NPT Ports
- G Pneumatic - G Ports

Ram Dowels
D06,D08,D10 (Dowels are Nominal)

Ram Holes
- C09, C11 Clearance holes
- M08, M10 Tapped Holes

Switch
- E Efector Weld Immune
- B Balluff
- T Turck
- S Sick (Standard) Weld Immune

Shield
- 0 None
- S Safety Orange(standard)
- B Black

Port Position
- 1 Port Position (Shown)
- 2 Port Position
- 3 Port Position
- 4 Port Position

Ram Position
- 0 0 Degree (Shown)
- 9 90 Degree

Switch Position
- E S01 Ext Pos
- R S01 Ret Pos

SPARE PARTS AND MAINTENANCE KIT

CYLINDER KIT P/N: ASP24-CK
INCLUDES:
(2) ASP24 CYLINDER BUMPER SEALS
(1) METRIC PISTON SEAL
(1) ASP24 DOUBLE LIP SEAL

WIPER KIT P/N: ASP24-WK
INCLUDES:
(1) ASP24 SS SCRAPER
(1) ASP24 DOUBLE LIP WIPER
(4) SELF TAPPING SCREWS

MIG & ARC SHIELD KIT P/N: ASP24-MAS-125
INCLUDES:
(1) ASP24 SHIELD
(3) M5X0.8-8 SHCS

SYM	CHANGES	DATE	BY

RAM HOLE ORDERING CHART			
RAM STYLE	Dowels	HOLES	STANDARD
D06 , C09	6.00mm THRU	9.0 THRU	** FCA
D06 , M08	6.00mm THRU	M8 TAP THRU	
D08 , C09	8.00mm THRU	9.0 THRU	** GM
D08, M08	8.00mm THRU	M8 TAP THRU	
D08 , C11	8.00mm THUR	11.0 THRU	** FORD
D08 , M10	8.00mm THRU	M10 TAP THRU	
D10 , C11	10.00mm THRU	11.0 THRU	
D10 , M10	10.00mm THRU	M10 TAP THRU	

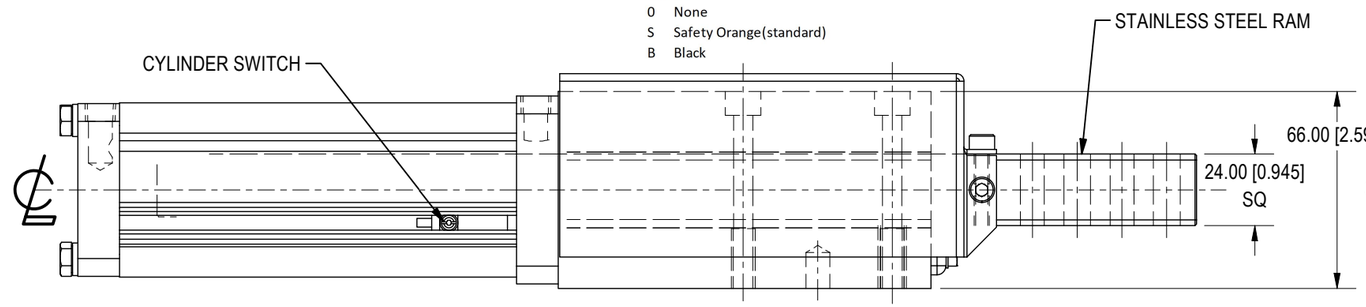

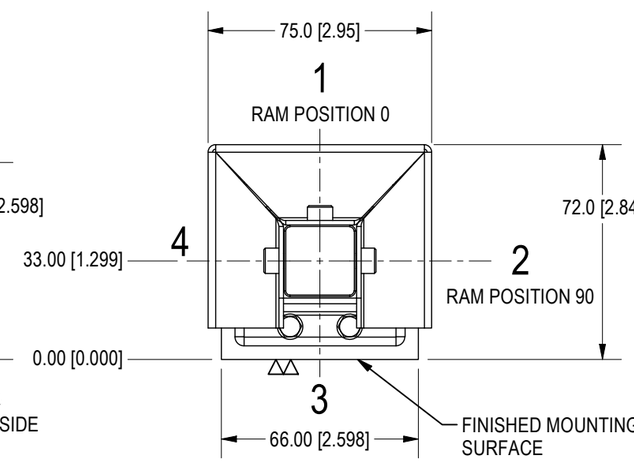

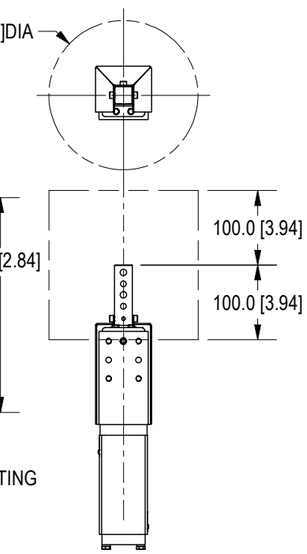

APPLICATION WINDOW
TOOLING MUST BE WITHIN THE APPROVED APPLICATION WINDOW FROM END OF RAM

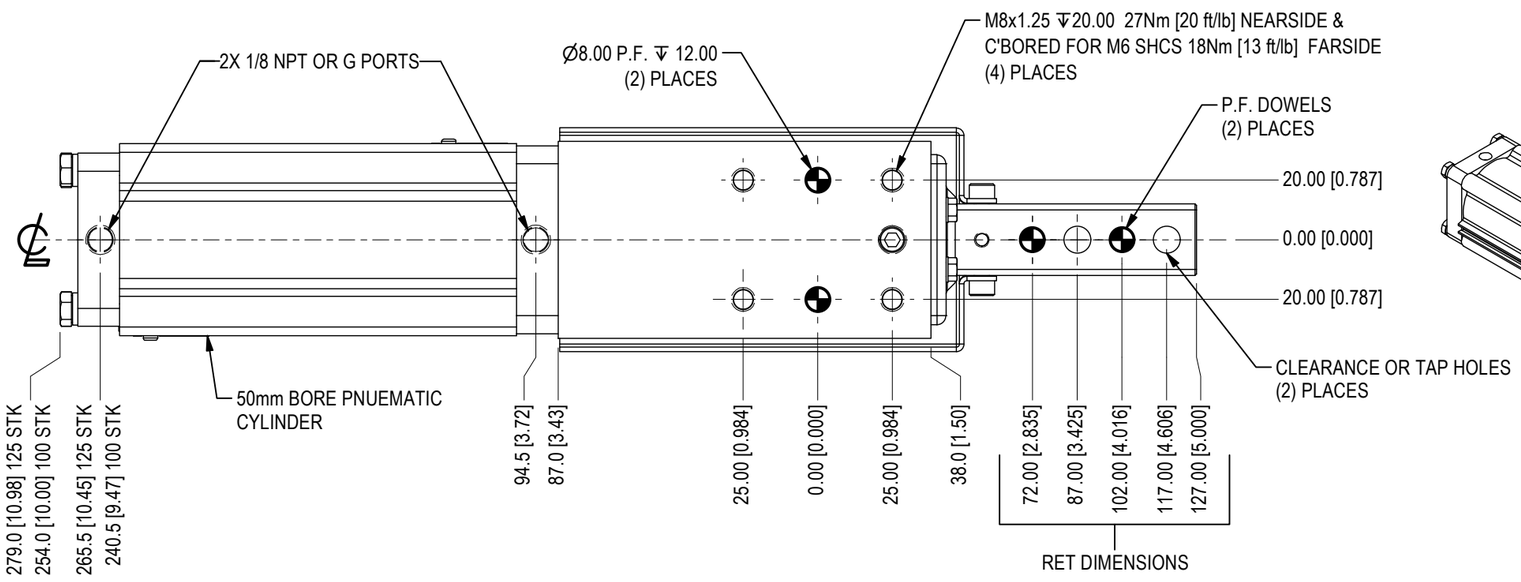

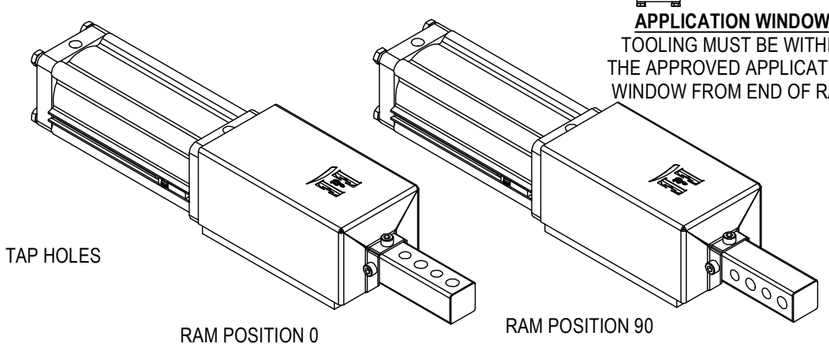

OPERATING PRESSURE - MIN 60psi = 182lbf [82.5kgf] EXT FORCE - 169lbf [76.6kgf] RETRACT FORCE
MAX 120psi = 362lbf [164.2kgf] EXT FORCE - 338.5lbf [153.5kgf] RETRACT FORCE
LOAD RATING - MAX TOOLING WT=22.5lbs [10kg], MAX GEO CONTACT OFFSET IS 100mm. MAX SIDE LOAD IS 55lbs [25kg]

WEIGHTS =
8.5lbs for 100mm Stroke
9.0lbs for 125mm Stroke

E&E CUSTOM PRODUCTS

7200 MILLER DR.
WARREN, MI 48092
EE-CP.COM

NOTICE: THIS DRAWING IS PROPERTY OF E&E CUSTOM PRODUCTS INCLUDING THE PRINCIPLES OF THE DESIGN INVOLVED, AND IS SUBMITTED WITH AGREEMENT THAT IT IS NOT TO BE REPRODUCED, COPIED, OR LOANED, IN PART OR WHOLE, ACCEPTANCE OF THIS DRAWING WILL BE CONSTRUED AS AN AGREEMENT TO THE ABOVE

TITLE: 24 SERIES LONG STROKE SHOT PIN

PART NO.

DRAWN BY:	CHK'D BY: EC	APPR'D BY: TT
DATE:	DATE: 10/18/2023	DATE: 10/18/2023
SCALE: 1/2	DWG. NO. ASP24-Long StrokeTemplate	
SHT 1 OF 1		